BOA Meeting Agenda
Peculiar City Board of Aldermen
Meeting and Public Hearing
City Hall – 250 S. Main St
Monday July 21, 2014 6:30 p.m.

Notice is hereby given that the Board of Aldermen of the City of Peculiar will hold a regularly scheduled meeting on Monday, July 21, 2014 at 6:30 pm, in the Council Chambers at 250 S. Main St. Representatives of the news media may obtain copies of this notice by contacting the City Clerk at City Hall, 250 S. Main St Peculiar, MO 64078 or by calling 816-779-2221. All proposed Ordinances and Resolutions will be available for viewing prior to the meeting in the Council Chambers.

1. Call to Order

2. Pledge of Allegiance

3. Roll Call

4. City Clerk – Read the Board of Alderman Statement

5. Consent Agenda

A. Approval of the Agenda
B. Approval of the Draft Minutes of June 16, 2014 BOA Meeting.
C. Approval of the Draft Minutes of June 23, 2014 Special Training Meeting
D. Approval of the Draft Minutes of July 7, 2014 Work Session Meeting.

6. Employee of the Quarter Presentation – Amiee Boyd

7. Mayor's Appointments – Paul Cannova, Scott Greener, Rick Schopfer and Cathy Wansing to Police Advisory Board
Resolution 2014-37 - A RESOLUTION OF THE BOARD OF ALDERMEN OF THE CITY OF PECULIAR, MISSOURI APPROVING THE APPOINTMENT OF PAUL CANNOVA, SCOTT GREENER, RICK SCHOPFER, AND CATHY WANSING TO THE POLICE ADVISORY BOARD

Steven Riley – to Park Board
Resolution 2014-38 - A RESOLUTION OF THE BOARD OF ALDERMEN OF THE CITY OF PECULIAR, MISSOURI APPROVING THE APPOINTMENT OF STEVEN RILEY TO THE PECULIAR PARK BOARD

8. New Business

A. Resolution 2014-39 - A RESOLUTION OF THE BOARD OF ALDERMEN OF THE CITY OF PECULIAR, MISSOURI AUTHORIZING THE MAYOR TO ENTER INTO A CONTRACT WITH THE INSTITUTE FOR BUILDING TECHNOLOGY AND SAFETY (IBTS) FOR THE PURPOSE OF SECURING PLAN REVIEW AND CONSTRUCTION INSPECION SERVICES FROM AUGUST 1ST, 2014 THRU JULY 31ST 2016.

B. Bill No. 2014-22 - AN ORDINANCE OF THE CITY OF PECULIAR, MISSOURI AMENDING PECULIAR MUNICIPAL CODE § 500.065 "ADOPTION OF STANDARD SPECIFICATION AND DESIGN CRITERA."
****1st Reading***

C. Resolution 2014-40 - A RESOLUTION OF THE BOARD OF ALDERMEN OF THE CITY OF PECULIAR, MISSOURI, APPROVING AND ACCEPTING THE AGREEMENT BETWEEN CITY OF PECULIAR AND LAMP, RYNEARSON & ASSOCIATES, INC DBA LARKIN LAMP RYNERSON FOR THE ENGINEERING DESIGN, ENGINEERING SURVEY, CONSTRUCTION ADMINISTRATION, AND PART-TIME CONSTRUCTION OBSERVATION OF THE KANSAS CITY WATER SUPPLY TRANSMISSION MAIN, MASTER METER AND APPURTENANCES.

D. Resolution 2014-41 - A RESOLUTION OF THE BOARD OF ALDERMEN OF THE CITY OF PECULIAR, MISSOURI, APPROVING AND ACCEPTING THE AGREEMENT BETWEEN CITY OF PECULIAR AND LAMP, RYNEARSON & ASSOCIATES, INC DBA LARKIN LAMP RYNERSON FOR THE ENGINEERING DESIGN, ENGINEERING SURVEY, CONSTRUCTION ADMINISTRATION, AND PART-TIME CONSTRUCTION OBSERVATION OF THE CIP WATER MAINS NOS. 1, 2, & 3; AND A SIDEWALK ALONG ROUTE C FROM CITY HALL TO THE I-49 INTERCHANGE.

9. Topics for Discussion

A. Comprehensive Plan Update

B. Carolla Engineers Draft Scope and Fee for Sanitary Sewer in the NW Area of Peculiar

C. Bank Card Fee update

10. City Administrator Report

11. Aldermen Concerns

12. Aldermen Directives

13. Adjournment

Board of Aldermen Regular Meeting Minutes
Monday June 16, 2014

A regular meeting and public hearing of the Board of Aldermen of the City of Peculiar, Missouri, was held in the Council Chambers in City Hall at 6:30 p.m. on Monday June 16, 2014. Mayor Holly Stark called the meeting to order and all who were present joined in reciting the Pledge of Allegiance.

The following aldermen responded to roll call: Jerry Ford, Patrick Roberts, Bob Fines, Donald Turner, Kelsie McCrea and Veronika Ray.

City Staff present for the meeting were City Administrator Brad Ratliff, City Attorney Reid Holbrook, Chief of Police Harry Gurin, Parks & Recreation Director Nathan Musteen, and City Engineer Carl Brooks.

Consent Agenda

A. Approval of the Agenda
B. Approval of the Draft Minutes of May 19, 2014 BOA Meeting.
C. Approval of the Draft Minutes of June 2, 2014 Work Session Meeting.

Aldermen Turner asked that Bill number 2014-17 vote be corrected to a 5-1 vote as opposed to the listed 6-0 vote on the May 19, 2014 minutes.

On a motion made by Alderman Roberts and seconded by Alderman Ford the amended consent agenda was approved as amended by a unanimous voice vote.

Mayor's Appointments – Dan Margita to Park Board
Resolution 2014-35 – A RESOLUTION OF THE BOARD OF ALDERMEN OF THE CITY OF PECULIAR, MISSOURI APPROVING THE APPOINTMENT OF DAN MARGITA TO THE PECULIAR PARK BOARD

Mayor Stark introduced Mr. Margita and stated that he would be filling the vacant spot left by current Park Board member Andrew Boston who had to resign from his position due to work scheduling conflicts.

There were no Board comments
No public comment.

Alderman Roberts made a motion to adopt Resolution No. 2014-35. The motion was seconded by Alderman Ford and was accepted by a 6-0 roll call vote.

Alderman Ford	Aye	Alderman Ray	Aye
Alderman McCrea	Aye	Alderman Roberts	Aye
Alderman Fines	Aye	Alderman Turner	Aye

New Business

A. Bill No. 2014-19 - AN ORDINANCE RESCINDING CHAPTER 125 OF THE PECULIAR MUNICIPAL CODE AND REPLACING WITH A NEW REVISED CHAPTER 125 THAT UPDATES THE ESTABLISHMENT AND ROLE OF THE PARK BOARD; AND ESTABLISH CHAPTER 226 OF THE PECULIAR MUNICIPAL CODE TO REQUIRE CRIMINAL BACKGROUND CHECKS FOR PARKS AND RECREATION VOLUNTEERS.
1st Reading

Parks & Recreation Director Nathan Musteen addressed the Board pertaining to the proposed Bill. He stated that this was a goal assigned to him to go through the current ordinances governing the Parks. This Bill would change some outdated information as well as restructure some of the sections of code so they coincide better. He stated that this Bill was approved through the Park Board.

Alderman Turner asked if the Bill would repeal all of section 125.
Staff commented that it would repeal section 125 and replace with a newly revamped section 125. Staff additionally commented that some of the sections in 125 would be moved to section 225 which would be brought to the Board as a Bill at the next meeting.

Aldermen Turner expressed concern that repealing these sections without having the other Bill to reestablish them could put the City at risk. Aldermen Turner said he would feel more comfortable having both Bills at the same time for first and second readings so there is no gap in coverage.

No public comment.

Aldermen Turner made a motion to table Bill No. 2014-19 until the next regularly scheduled meeting on July 7, 2014. Seconded by Alderman Roberts and was approved by a unanimous 6-0 Roll Call vote.

Alderman Ford	Aye	Alderman Ray	Aye
Alderman McCrea	Aye	Alderman Roberts	Aye
Alderman Fines	Aye	Alderman Turner	Aye

Topic for Discussion

A. Trash Days

Business Office Manager Trudy Prickett addressed the Board regarding the City's Bulk Trash Days event held annually. She stated that at the direction of the City Administrator she put together the cost of having the event for the last 4 years. She stated that over the last 4 years the City has been losing money on the event and wanted to address the situation before budget. She stated that she had 3 options. 1 was to continue service but charge a small service fee for seniors instead of it being free. 2 would be moving trash days to Town & Country's Facility which would be free to all residents and then they would charge the City for the tonnage of waste collected. 3 would be to discontinue trash days entirely.

Mayor Stark stated she is not in favor of discontinuing trash days. After further discussion amongst the Board it was decided to host future trash days at the Town & Country facility on 291 Highway.

B. Bank Card fees

Trudy Prickett addressed the Board again regarding the fees the City pays for accepting credit/debit cards. She gave a brief overview on the number of fees which are charged to the City per month. She stated that she contacted other Cities and there were only two which passed along fees to the customer. The fee was assessed by the credit card processing company. At the current time the City's system cannot do this procedure.

Mayor Stark stated that it is a convenience to the people and would like to keep it.

There was further discussion amongst the Board regarding assessing a flat fee or assessing a percentage.

It was determined to have staff figure out a fee based on the number of transactions to cover the $24,000 cost each year.

City Administrators Report

This Friday is 3rd Friday Coffee at UMB Bank. The Tractor Pull is Saturday at 7:00 pm. Amnesty Day is also Saturday from 9:00 am to 12:00 pm. Special meeting is next Monday at 6:30 pm with Gary Markenson. Brierly Hall has put up their ADA compliant ramp and will be hosting classes soon. Housing permits are moving along nicely. Heard a developer is purchasing many lots around town. Remodeling at the Police Department is nearly finished. The modular home at the Police Storage Facility was sold on GovDeals. School Road project has been paved across the bridge, but the City Engineer is not happy with the finish of it. We are hopeful to find out in November if we received the TIGER Grant. MoDOT is pushing a sales tax for roads on the August Ballot. Water Loss is at 3% this month which is still great. MoDOT is beginning work on the new traffic signals at J/C Interchange. MoDOT is looking at just giving the money to the City for the Main Street Sidewalk project. A Grant was received for $50,000 for a sewer study in the Northwest section of the City. The ground water storage tank project is moving along but there was some concern over some of the ceiling beams. Raisebeck Park was seeded before the rain and everyone is waiting to see if it gets washed away.

Mayor Stark commented that she has been meeting with the Mayor of Belton and the Mayor of Raymore for the past few months to discuss economic development and other topics.

Alderman Concerns

Aldermen McCrea asked that when a plan comes through for the Bank Card Fees to also have a plan for communication to the public.

Mayor Stark commented that at the last meeting it was the consensus of the Board to have a public open forum. After some discussion it was determined to have the public open forum on Tuesday July, 15th at 6:30 pm. Staff will place the notice on the back of the bills, in the newsletter and on Facebook.

Alderman Ford asked about any interest from the Park Board on the pocket park proposal.
Alderman McCrea stated the Park Board is not interested at this time.

Alderman Ford asked about any credits on sewer for filling pools.
Mayor Stark replied that there is a one time credit for new pools only or if they contact City Hall before filling and allow staff to get a reading of the meter and then contact after it is filled to get a second reading. This way staff can have an idea of the number of gallons that went through the meter.

Alderman Ford asked about people habitually blocking the sidewalk.
Mayor Stark replied that there is an Ordinance for blocking sidewalks.

Alderman Directives

Notify Dan Margita and welcome him to Park Board.
Postpone Bill 2014-19 until the next meeting when the other Bills will be ready.

Move Trash Days to Town & Country facility.
Come up with a process that covers cost on Bank Card fees.
Set up Open House meeting on July 15th.

Adjournment

On a motion from Alderman Ford, second from Alderman Turner, the meeting was adjourned at 7:40pm with a 6-0 voice vote.

Regular session minutes were taken and transcribed by Nick Jacobs, City Clerk.

_____
Nick Jacobs, City Clerk

Approved by the Board of Aldermen:

DRAFT

Board of Aldermen Special Training Meeting Minutes
Monday June 23, 2014

A Special Training meeting and public hearing of the Board of Aldermen of the City of Peculiar, Missouri, was held in the Council Chambers in City Hall at 6:30 p.m. on Monday June 23, 2014. Mayor Holly Stark called the meeting to order and all who were present joined in reciting the Pledge of Allegiance.

The following aldermen responded to roll call: Jerry Ford, Bob Fines, Donald Turner, Kelsie McCrea and Veronika Ray. Patrick Roberts joined the meeting after roll call was taken.

City Staff present for the meeting was City Administrator Brad Ratliff.

Training
Former Missouri Municipal League President Gary Markenson – Training for elected and appointed officials.

Gary Markenson addressed the Board and went through several areas of training with the Board of Aldermen. It was an informal question and answer session.

No business was discussed.

Adjournment

On a motion from Alderman Ford, second from Alderman Turner, the meeting was adjourned at 8:57pm with a 6-0 Roll Call vote.

Regular session minutes were taken and transcribed by Nick Jacobs, City Clerk.

_____
Nick Jacobs, City Clerk

Approved by the Board of Aldermen:

DRAFT

Board of Aldermen Regular Meeting Minutes
Monday July 7, 2014

A regular work session meeting and public hearing of the Board of Aldermen of the City of Peculiar, Missouri, was held in the Council Chambers in City Hall at 6:30 p.m. on Monday July 7, 2014. Mayor Holly Stark called the meeting to order and all who were present joined in reciting the Pledge of Allegiance.

The following aldermen responded to roll call: Veronika Ray, Donald Turner, Bob Fines, Jerry Ford, Kelsie McCrea and Patrick Roberts.

City Staff present for the meeting were City Administrator Brad Ratliff, City Attorney Reid Holbrook, City Engineer Carl Brooks, Chief of Police Harry Gurin, City Clerk Nick Jacobs, City Planner Clifford McDonald, Business Office Manager Trudy Prickett, and Parks & Recreation Director Nathan Musteen.

Life Saving Award Presentation to Ryan Jensen

Mayor Stark gave a brief presentation honoring Officer Ryan Jensen for his response to a local accident in which he was able to perform life savings measures on an injured child.

Proclamation – Katie Kalinka - Civic Involvement

Mayor Stark gave a brief background of Mrs. Kalinka's efforts to assist with local charities in the City of Peculiar. She read the Proclamation and proclaimed July 8th, 2014 as Katie Kalinka Day in the City of Peculiar.

Mayor's Appointments – Andrew Boston to Tree Board
Resolution 2014-36 - A RESOLUTION OF THE BOARD OF ALDERMEN OF THE CITY OF PECULIAR, MISSOURI APPROVING THE APPOINTMENT OF ANDREW BOSTON TO THE PECULIAR TREE BOARD

Mayor Stark announced that Andrew Boston had to resign from the Park Board due to work scheduling conflicts but wishes to continue volunteering on the Tree Board. This would be the first at large seat on the Tree Board.

Alderman Ford moved to adopt Resolution No. 2014-36, seconded by Alderman Turner and approved by the following 6-0 roll call vote.

Alderman Ford	Aye	Alderman Ray	Aye
Alderman McCrea	Aye	Alderman Roberts	Aye
Alderman Fines	Aye	Alderman Turner	Aye

Business

A. Resolution 2014-37 – A RESOLUTION OF THE BOARD OF ALDERMEN OF THE CITY OF PECULIAR, MISSOURI APPROVING THE ISSUANCE OF A ROCK QUARRY & MINING OPERATIONS LICENSE TO MARTIN MARIETTA MATERIALS UNDER THE CONDITIONS AND RESTRICTIONS SPECIFIED HEREIN.

Mayor Stark stated that this item was removed from the agenda for legal review and language changes.

B. Bill No. 2014-19 - AN ORDINANCE RESCINDING CHAPTER 125 OF THE PECULIAR MUNICIPAL CODE AND REPLACING WITH A NEW REVISED CHAPTER 125 THAT UPDATES THE ESTABLISHMENT AND ROLE OF THE PARK BOARD
1st and potential 2nd reading

Nathan Musteen commented that this is the same Bill that was presented at the last meeting but has now had the section dealing with Chapter 226 removed and is now its own Bill.

Alderman Turner asked where some of the sections that were getting repealed what would be replacing them.
Staff commented that some sections are covered by other sections already adopted in the current City Code, and some sections were removed if they overstepped the capabilities of the Park Board as directed by State Statute.
No public comment.

Alderman Roberts moved to have the first reading of Bill No. 2014-19 by title only, seconded by Alderman Ford and was approved by a 6-0 voice vote. Alderman Roberts moved to accept the first reading of the bill, seconded by Alderman Ford and approved by the following 6-0 voice vote.

Alderman Ford	Aye	Alderman Ray	Aye
Alderman McCrea	Aye	Alderman Roberts	Aye
Alderman Fines	Aye	Alderman Turner	Aye

Alderman Roberts moved to have the second reading of Bill No. 2014-19 by title only, seconded by Alderman Ford and was approved by a 5-1 voice vote with Alderman Turner casting the Nay vote. Alderman Roberts moved to accept the second reading of the bill and place on final passage as Ordinance number 07072014, seconded by Alderman Ford and approved by the following 6-0 roll call vote.

Alderman Ford	Aye	Alderman Ray	Aye
Alderman McCrea	Aye	Alderman Roberts	Aye

DRAFT

Alderman Fines	Aye	Alderman Turner	Aye

C. Bill No. 2014-20 - AN ORDINANCE RESCINDING CHAPTER 225 OF THE PECULIAR MUNICIPAL CODE AND REPLACING WITH A NEW REVISED CHAPTER 225 THAT UPDATES THE RULES AND REGULATIONS GOVERNING THE PECULIAR PARKS AND PUBLIC PROPERTIES.
1st and potential 2nd reading

Nathan Musteen stated that this Bill addresses some of the rules and regulations governing the Park system. The original code mentioned some things that are no longer available or utilized by the City. This went through the Park Board and the Attorney and has been approved.

Aldermen Turner asked about the hours of operations for the Parks.
Staff commented that active parks will close at 11:00pm if they are lit, whereas natural parks with no lights close at dusk.
No public comment.

Alderman Ford moved to have the first reading of Bill No. 2014-20 by title only, seconded by Alderman Ford and was approved by a 6-0 voice vote. Alderman Ford moved to accept the first reading of the bill, seconded by Alderman Turner and approved by the following 6-0 voice vote.

Alderman Ford	Aye	Alderman Ray	Aye
Alderman McCrea	Aye	Alderman Roberts	Aye
Alderman Fines	Aye	Alderman Turner	Aye

Alderman Ford moved to have the second reading of Bill No. 2014-20 by title only, seconded by Alderman Roberts and was approved by a 5-1 voice vote with Alderman Turner casting the Nay vote. Alderman Ford moved to accept the second reading of the bill and place on final passage as Ordinance number 07072014A, seconded by Alderman Roberts and approved by the following 6-0 roll call vote.

Alderman Ford	Aye	Alderman Ray	Aye
Alderman McCrea	Aye	Alderman Roberts	Aye
Alderman Fines	Aye	Alderman Turner	Aye

D. Bill No. 2014-21 - AN ORDINANCE ESTABLISHING CHAPTER 226 OF THE PECULIAR MUNICIPAL CODE TO REQUIRE CRIMINAL BACKGROUND CHECKS FOR PARKS AND RECREATION VOLUNTEERS.
1st and potential 2nd reading

Nathan Musteen stated that this Bill is the same that was shown to the Board at the previous meeting and this will apply to volunteers only not paid employees. This is a very broad Ordinance and it allows the department and Park Board to change the policy as they see fit and have a policy in the works approved by Mr. Holbrook's office.

Alderman Turner asked who pays for the background check.
Staff commented that it is figured into the cost of the project.
Alderman Roberts commented that it is a great defense for the City and should give piece of mind for the parents.

No public comment.

Alderman Roberts moved to have the first reading of Bill No. 2014-21 by title only, seconded by Alderman Ford and was approved by a 6-0 voice vote. Alderman Roberts moved to accept the first reading of the bill, seconded by Alderman Turner and approved by the following 6-0 voice vote.

Alderman Ford	Aye	Alderman Ray	Aye
Alderman McCrea	Aye	Alderman Roberts	Aye
Alderman Fines	Aye	Alderman Turner	Aye

Alderman Roberts moved to have the second reading of Bill No. 2014-21 by title only, seconded by Alderman Ford and was approved by a 5-1 voice vote with Alderman Turner casting the Nay vote. Alderman Roberts moved to accept the second reading of the bill and place on final passage as Ordinance number 07072014B, seconded by Alderman Ford and approved by the following 6-0 roll call vote.

Alderman Ford	Aye	Alderman Ray	Aye
Alderman McCrea	Aye	Alderman Roberts	Aye
Alderman Fines	Aye	Alderman Turner	Aye

Topics for Discussion

A. Institute for Building Technology and Safety (IBTS)

City Planner Cliff McDonald addressed the Board regarding potentially utilizing IBTS services in the near future. They excel at providing services after a disaster or after a substantial growth in population in which staff could not keep up. There would be a contract proposed at the next meeting for approval. They would be an on call needed basis. This service would be an asset if the City starts developing at a large rate. Brad Ratliff commented that he would like to utilize the service for public infrastructure inspections.

Alderman Fines stated this has a way of eliminating jobs.
Mayor Stark commented that this is to assist staff if the City gets hit with rapid expansion.

Cliff commented that this contract would be for 2 years and would be an on call basis.

There was further discussion from the Board and the contract would be brought before the Board at the next meeting.

B. Water Supply Engineering Report and Engineering contracts for Water Main Design by Larkin and Associates

City Engineer Carl Brooks addressed the Board pertaining to the Water Supply Engineering Report, which came about from a grant received from Missouri Department of Natural Resources (MoDNR). He outlined the data that was in the report which included alternate water supplies as well as Capital Improvement Projects. The report also details a hydraulic model of the current water system. Carl stated that MoDNR has already approved the engineering report and the 5 year Owner/Supervisor program.

Alderman Fines asked what the cost of the transmission main would be to hook up to Kansas City.
Mayor Stark commented $3,772,389.

Carl discussed that one of the CIP Projects is replacement of a water main on Peculiar Dr. which will tie directly into the City's sidewalk project from City Hall to the J/C Interchange.

C. Engineering contract for Sanitary Sewer in NW Area of City

Brad Ratliff addressed the Board pertaining to sanitary sewer in the Northwest area of the City. He stated that with the topography of the land, it makes sense to have all of the flow in the area go to the City of Belton's Waste Water Treatment Plant. This would be accomplished via an interlocal agreement. This contract and study are paid for by a $50,000 Grant received from MoDNR.

Alderman Fines asked how Belton has reacted to Peculiar wanting to execute this plan?
Staff commented that Belton has been very receptive and have a regional mindset on the issue.

Mayor Stark commended the staff on attaining the Grants.

D. Bid Results for Bridle Trail Curb and Gutter RFP

Carl addressed the Board regarding a plan to do some curb and gutter work in Bridle Trail subdivision. There was 1 bid received to do the work which came in at $12,000 which is already over budget. When talking to the Public Works Manager he did not feel that his crew could do a quality job. Carl contacted the City of Raymore to see if we could piggy back on their contract but Raymore did not write the contract to allow it. Lee's Summit is currently bidding and would be awarding a contract soon.

There was some further discussion amongst the Board.

Mayor Stark commented that it's probably best to wait for Lee's Summit to award their contract and try and piggy back on them.

At 8:00 pm there was a 5 minute recess.

Workshop - Derrick Nielsen, Vice President, Allen, Gibbs, & Houlik L.C.

Mr Nielsen met with the Board and spent the rest of the meeting going through a training exercise to figure out the Board collective vision of the City. He helped the Board visualize what were priority projects and what was disguised as priority projects. There was much interaction between the Board and staff.

Aldermen Concerns or Additional Topics for Discussion by Aldermen

No Aldermen Concerns.

Mayor Stark said Downtown Peculiar Arts and Culture District sends thanks to the City for helping to promote their FarmArt farmers market.

She pointed out that the City Attorney was nominated for Top Lawyer in America.

Finally there was a complaint about fireworks and Mayor Stark stated the Board would address it after budget season.

Alderman Ray asked about how much advertising was being done for the open house meeting on the 15th.
Staff replied that it is on Facebook, it is on the Bank Marquee, as well as in the newsletter and on the back of the water bills.

Aldermen Directives Reported by City Administrator

Alderman Directives were delayed at the Mayors discretion.

Adjournment

On a motion from Alderman Ford, second from Alderman Turner, the meeting was adjourned at 10:14pm with a 6-0 voice vote.

Regular session minutes were taken and transcribed by Nick Jacobs, City Clerk.

_____
Nick Jacobs, City Clerk
Approved by the Board of Aldermen:

DRAFT

City Administrator
Brad Ratliff

City Clerk
Nick Jacobs

City Engineer
Carl Brooks

Business Office
Trudy Prickett

Chief of Police
Harry Gurin

City Planner
Cliff McDonald

City Attorney
Reid Holbrook

Parks Director
Nathan Musteen

Municipal Offices – 250 S. Main Street, Peculiar, MO 64078
Phone: (816)779-5212 Facsimile: (816)779-1004

To: **Board of Alderman**
From: **Holly Stark, Mayor**
Date: **July 21, 2014**
Re: **Resolution #2014-37**
Appointment of Paul Cannova, Scott Greener, Rick Schopfer and Cathy Wansing to Police Advisory Board

GENERAL INFORMATION

Applicant: Mayor
Status of Applicant:
Requested Actions: Appointment by Mayor to the Police Advisory Board.
Date of Application: July 21, 2014
Purpose: Appointment to Police Advisory Board
Property Location (if applicable)**:**

PROPOSAL

As per Peculiar Municipal Code, Section 200.120

PREVIOUS ACTIONS

In May 2014 the Board of Aldermen reestablished the Police Advisory Board.

KEY ISSUES

This Resolution will appoint 4 members to the Police Advisory Board. Per City Code there will be 1 member from each Ward and 1 member at large. This Resolution will meet all requirements set in place by the Ordinance. All positions on the Board hold a 1 year term.

STAFF COMMENTS AND SUGGESTIONS

None.

STAFF RECOMMENDATION

Approval of Appointment by Mayor

ATTACHMENTS

Resolution 2014-37

RESOLUTION 2014-37

A RESOLUTION OF THE BOARD OF ALDERMEN OF THE CITY OF PECULIAR, MISSOURI APPROVING THE APPOINTMENT OF PAUL CANNOVA, SCOTT GREENER, RICK SCHOPFER, AND CATHY WANSING TO THE POLICE ADVISORY BOARD

WHEREAS, Chapter 200 of the Peculiar Municipal Code establishes a Police Advisory Board consisting of five (5) members; and

WHEREAS, Chapter 200.120 of the Peculiar Municipal Code authorizes the Mayor to make appointments and to fill vacancies to the Police Advisory Board with approval by the Board of Alderman; and

WHEREAS, the Board of Aldermen have determined the need to appoint members to the Police Advisory Board; and

WHEREAS, Paul Cannova, Scott Greener, Rick Schopfer and Cathy Wansing meet the qualifications for appointment to this board as a Residents of each Ward; and

WHEREAS, said appointments carry term of 1 year that expires on July 21, 2015; and

WHEREAS, Mayor Holly Stark recommends the appointment of Paul Cannova, Scott Greener, Rick Schopfer and Cathy Wansing as members of the Police Advisory Board upon approval of the Board of Aldermen

NOW THEREFORE, BE IT RESOLVED BY THE BOARD OF ALDERMEN OF THE CITY OF PECULIAR, MISSOURI:

Section 1 – Appointment: The Board of Aldermen approves the appointment of Paul Cannova, Scott Greener, Rick Schopfer and Cathy Wansing to the Police Advisory Board.

Section 2 - Effective Date: This resolution shall become effective upon approval and passage by the Board of Aldermen.

THIS RESOLUTION WAS ADOPTED BY THE FOLLOWING ROLL CALL VOTE THIS 21st DAY OF JULY, 2014

Alderman McCrea	___	Alderman Ray	___
Alderman Fines	___	Alderman Roberts	___
Alderman Ford	___	Alderman Turner	___

Approved: _____
Holly Stark, Mayor

Attest: _____
Nick Jacobs, City Clerk

City Administrator
Brad Ratliff

City Clerk
Nick Jacobs

City Engineer
Carl Brooks

Business Office
Trudy Prickett

Chief of Police
Harry Gurin

City Planner
Cliff McDonald

City Attorney
Reid Holbrook

Parks Director
Nathan Musteen

Municipal Offices – 250 S. Main Street, Peculiar, MO 64078
Phone: (816)779-5212 Facsimile: (816)779-1004

To: **Mayor and Board of Alderman**
From: **Nathan Musteen, Parks Director**
Date: **July 21, 2014**
Re: **Resolution #2014-38**
Appointment of Steven Riley to the Park Board

GENERAL INFORMATION

Applicant: Steven Riley
Status of Applicant: Park Board Volunteer Applicant
Requested Actions: Appointment by Mayor to the Park Board.
Date of Application: June 16, 2014
Purpose: Appointment to Park Board
Property Location (if applicable)**:** 509 W. 5th Court.

PROPOSAL

As per Peculiar Municipal Code, Section 125.020 and 125.040

PREVIOUS ACTIONS

Park Board Member, Doug Stark, notified City Staff that he was resigning from the Park Board. His resignation would be effective immediately.

KEY ISSUES

Applicant will fill a vacated seat on the City of Peculiar's Park Board ending in September 2017. Mr. Stark resides in Ward 2 and Mr. Riley resides in Ward 1, therefore the Ward representation will stay consistant because of other Ward 2 at large members.

STAFF COMMENTS AND SUGGESTIONS

The City and the Parks Department is fortunate and excited to have residents interested in Peculiar Parks and Recreation and be willing to volunteer for service on the Park Board. Upon approval of the Board of Alderman and appointment by the Mayor, the Park Board will welcome its newest member and continue moving forward while maintaining good Ward Representation throughout the City.

STAFF RECOMMENDATION

Approval of Appointment by Mayor

ATTACHMENTS

Resolution 2014-38

STAFF CONTACT: Nathan Musteen, CPRP
Parks & Recreation Director
816-779-2225
nmusteen@cityofpeculiar.org

City of Peculiar

Boards / Commissions Application Form

Thank you for your interest in serving on one of the City's Boards/Commissions. Volunteers are essential to ensure our City government is responsive to the needs of the community. Please help us place you on the most appropriate commission by completing this questionnaire, you may attach your resume or additional information as needed.

Boards / Commissions of Interest:

_____ Planning Commission X Parks & Recreation Board _____ Board of Adjustment _____ Peculiar Tree Board

Name: Steven Riley **Home Phone**: (816) 260-6533

Address: 509 W. 5th Court **Alternate Phone**: (816) 260-6533

City, State, Zip: Peculiar MO, 64078 **Email Address**: Sriley@rffisher.com

Ward: 1) _____ 2) _____ 3) _____ (*contact City Hall if you are unsure of your Ward*)

Education: (*Please mark the highest level completed*)

_____ High School (please list the High School you attended) _____

X College (please list College/University and Degree) Associates in applied Science Metropolitan Community College

Current Employment:

Employer: RF Fisher Electric **Position**: Foreman

Address: 1707 W 39th Ave, Kansas City Kansas **Work Phone**: (816) 260-6533

Have you previously served on a City Board or Commission? _____ Yes X No If Yes, please describe:

Are you currently registered to vote in the City of Peculiar? X Yes _____ No

Why do you want to serve on this Board/Commission? I have lived in Peculiar for 20 years and want to take a greater intrest in our city. I have four children that love to play. I would like to see improvements in our programs and facilities.

Please describe any business or property interest which might place you in a conflict of interest situation should you be appointed to this Board/Commission. _____

Are you related to any current member of the Board of Alderman? _____ Yes X No If Yes, please describe:

BOA Member Name: _____ *Relationship:* _____

Signature: SRj *Date:* 6-16-14

Return Application to:	City of Peculiar C/O City Clerk 250 South Main Street Peculiar, MO 64078

RESOLUTION 2014-38

A RESOLUTION OF THE BOARD OF ALDERMEN OF THE CITY OF PECULIAR, MISSOURI APPROVING THE APPOINTMENT OF STEVEN RILEY TO THE PECULIAR PARK BOARD

WHEREAS, Chapter 125:010 of the Peculiar Municipal Code establishes a Park Board consisting of seven (7) members; and

WHEREAS, Chapter 125:020 AND 125:040 of the Peculiar Municipal Code authorizes the Mayor to make appointments and to fill vacancies to the Park Board with approval by the Board of Alderman; and

WHEREAS, the Board of Aldermen have determined the need to appoint a member to the Park Board; and

WHEREAS, Steven Riley meets the qualifications for appointment to this board as a Resident of Ward 1; and

WHEREAS, said appointment carry's a term that expires on September 1, 2017; and

WHEREAS, Mayor Holly Stark recommends the appointment of Steven Riley as a member to the Park Board upon approval of the Board of Aldermen

NOW THEREFORE, BE IT RESOLVED BY THE BOARD OF ALDERMEN OF THE CITY OF PECULIAR, MISSOURI:

Section 1 – Appointment: The Board of Aldermen approves the appointment of Steven Riley to the Park Board.

Section 2 - Effective Date: This resolution shall become effective upon approval and passage by the Board of Aldermen.

THIS RESOLUTION WAS ADOPTED BY THE FOLLOWING ROLL CALL VOTE THIS 21st DAY OF JULY, 2014

Alderman McCrea	___	Alderman Ray	___
Alderman Fines	___	Alderman Roberts	___
Alderman Ford	___	Alderman Turner	___

Approved: _____
Holly Stark, Mayor

Attest: _____
Nick Jacobs, City Clerk

City Administrator
Brad Ratliff

City Clerk
Nick Jacobs

City Engineer
Carl Brooks

Business Office
Trudy Prickett

Chief of Police
Harry Gurin

City Planner
Cliff McDonald

City Attorney
Reid Holbrook

Parks Director
Nathan Musteen

Municipal Offices – 250 S. Main Street, Peculiar, MO 64078
Phone: (816)779-5212 Facsimile: (816)779-1004

To: **Board of Alderman**

From: **Clifford L. McDonald**

Date: July 21, 2014

Re: Contract Service Agreement with IBTS (Institute for Building Technology and Safety) for Project Design Review, Construction Inspection and City Planning Services

GENERAL INFORMATION

Applicant: City Staff

Status of Applicant: **N/A**

Requested Actions: Board of Aldermen to consider authorizing the Mayor to enter into the Service Agreement with IBTS to provide On-call Project Design Review, Construction Inspection and City Planning Services by approving the attached Resolution.

PROPOSAL

See "Requested Actions" above.

PREVIOUS ACTIONS

Board of Aldermen reviewed the IBTS Implementation Guide for Project Design Review, Construction Inspection and City Planning Services on July 7th, 2014.

KEY ISSUES

The City needs to position itself and prepare for substantial Commercial and Industrial growth once the new E. 211th Street & I-49 Intersection is completed. The desired growth and construction in this area could easily exceed the resources available from City Staff. To ensure necessary design review and construction inspection services are available for both large scale and rapid development, City Staff contacted IBTS (Institute for Building Technology and Safety) thru MARC (Mid America Regional Council) to submit an application to provide these resources. The attached Service Agreement from IBTS being presented this evening for the Board's consideration will ensure these construction & inspection resources are available for the City of Peculiar for the next two (2) years.

STAFF COMMENTS AND SUGGESTIONS

1. Staff recommends the City contract for the Six (6) Services identified in Section 3.0, Service Selection (see attachment 1).
2. Contract Inspection Fees are comparable to the City's existing fee schedule.
   Example for Residential Construction: (2000 sq. ft. home)
   a. City of Peculiar Admin Fee (Approx Const. Cost $200K) $1,542
   b. IBTS Fee Total (bottom of SERVICE AGREEMENT – Atch B-2) $1,239

Example for Industrial (Warehouse) Construction: (Approx Const. Cost $1 Mil)

a. City of Peculiar Admin Fee	$5,608
b. IBTS Fee Total (bottom of SERVICE AGREEMENT – Atch B-3)	$1,525

STAFF RECOMMENDATION

I recommend the Board review the attached IBTS Service Agreement and strongly consider approving the Mayor to enter into this agreement with IBTS to provide the City with these "On-Call" Design Review, Construction Inspection and Planning Services as needed for the next two (2) years.

ATTACHMENTS

1. IBTS Service Agreement, Section 3.0 Service Selection
2. IBTS Service Agreement
3. Resolution 2014-

STAFF CONTACT: Clifford L. McDonald,
PH: 816-779-2226
E-mail: cmcdonald@cityofpeculiar.com

2.0 CUSTOMER SERVICE

Customer Service – Should an issue arise for any Jurisdiction with delivery of services by IBTS that Jurisdiction shall notify IBTS and work directly with IBTS to resolve the issue within 30 days. Should the issue remain unresolved after 30 days, the Jurisdiction can seek further resolution, including cancelation of the Service Agreement between the Jurisdiction and IBTS based upon the terms of the Service Agreement.

3.0 SERVICE SELECTION

The full scopes of services offered by IBTS found in the Master Agreement are listed as attachments to this Service Agreement. The City of Peculiar, Missouri hereby selects to implement the services identified below by initialing beside the services to be implemented in the City of Peculiar, Missouri:

_XX_____ : Building Code Department Services & Fees, Attachment B
_____ : Flood Plain Services & Fees, Attachment C
_XX_____ : Accessibility Code Services & Fees, Attachment D
_XX _____ : Fire Code Review & Inspection Services & Fees, Attachment E
_XX _____ : Storm water Services & Fees, Attachment F
_XX_____ : FIT® Permitting Software & Fees, Attachment G
_____ : Energy Management & Green Building Services & Fees, Attachment H
_XX_____ : Planning & Zoning Services & Fees, Attachment I
_____ : Property Maintenance Services, Attachment J

4.0 CHANGES AND ADDITIONAL SERVICES

The City of Peculiar, Missouri may request addendums to the services outlined in the following attachments so that additional services not currently described can be added. Examples of addendums that can be included are specialty services, such as Property Maintenance Services, Contractor Licensing Services, Business Licensing Services, Public Works Inspections, and other services as needs are identified and documented by MARC, IBTS and/or Jurisdiction(s). If any such change causes an increase or decrease in the cost of or in the time required for performance of this Master Agreement, IBTS shall notify MARC in writing immediately, but, in any event, prior to executing an Agreement Modification. IBTS and MARC will negotiate the new terms and modify the Master Agreement as described in Section 15.0 – Agreement Modification.

Service Agreement

Between

IBTS

and

CITY OF PECULIAR, MISSOURI

On this 21st day of July, 2014, the City of Peculiar, Missouri herein after referred to as “City", located at 250 S. Main Street, Peculiar, MO 64078, and the Institute for Building Technology and Safety, headquartered at 45207 Research Place, Ashburn, VA, 20147 hereinafter referred to as "IBTS,” do hereby enter into this Service Agreement under the following terms and conditions.

WITNESSETH

WHEREAS, the Mid-America Regional Council (MARC), along with IBTS and has made available to the City of Peculiar, Missouri for consideration regional building code services; and

WHEREAS, IBTS is a nonprofit organization whose purpose is to assist local Jurisdictions and regional councils by delivering quality services that meet the challenges of governance at all levels while enhancing public safety, economic development and the general welfare of the community; and

WHEREAS, the City of Peculiar, Missouri recognizes the safety and other energy benefits from code compliance of residential and commercial structures; and

WHEREAS, the City of Peculiar, Missouri desires to participate in the regional services negotiated by MARC with IBTS:

NOW THEREFORE, in consideration of the above, the City of Peculiar, Missouri hereby enters into this cooperative purchase agreement made available through the Kansas City Regional Purchasing Cooperative (KCRPC) program for the services described below:

In consideration of the mutual agreements contained herein, the City of Peculiar, Missouri and IBTS agree as follows, to-wit:

1.0 DEFINITIONS

“MARC/IBTS Project” hereafter referred to as “Project” references the full scope of activities and services outlined in this Master Agreement for the building department services project.

“Advisory Committee” refers to the Oversight Advisory Committee established by MARC. The Advisory Committee consists of representatives of participating Jurisdictions and will meet on a periodic basis to provide input and guidance for the Project.

“Applicant” refers to any individual, business or organization applying for building code department permits and/or services from a Jurisdiction and paying certain fees for those permits and/or services.

“Jurisdictions” refers to city, county and other governmental organizations in the states of Kansas and Missouri.

“Master Agreement” refers to the agreement entered into by MARC and IBTS for the purposes of defining key elements of the regional approach to the building department services project (also called MARC/IBTS Project or Project) and the responsibilities of both parties.

“Services Agreement” refers to this agreement entered into by the City of Peculiar, Missouri and IBTS that define specific services to be delivered by IBTS to the City. This Service Agreement should be considered as a cooperative purchase agreement made available through the Kansas City Regional Cooperative Purchasing program (KCRPC). Any Jurisdiction in the states of Kansas and Missouri can enter into a Service Agreement with IBTS as a result of this Master Agreement.

2.0 CUSTOMER SERVICE

Customer Service – Should an issue arise for any Jurisdiction with delivery of services by IBTS that Jurisdiction shall notify IBTS and work directly with IBTS to resolve the issue within 30 days. Should the issue remain unresolved after 30 days, the Jurisdiction can seek further resolution, including cancelation of the Service Agreement between the Jurisdiction and IBTS based upon the terms of the Service Agreement.

3.0 SERVICE SELECTION

The full scopes of services offered by IBTS found in the Master Agreement are listed as attachments to this Service Agreement. The City of Peculiar, Missouri hereby selects to implement the services identified below by initialing beside the services to be implemented in the City of Peculiar, Missouri:

_____ : Building Code Department Services & Fees, Attachment B
_____ : Flood Plain Services & Fees, Attachment C
_____ : Accessibility Code Services & Fees, Attachment D
_____ : Fire Code Review & Inspection Services & Fees, Attachment E
_____ : Storm water Services & Fees, Attachment F
_____ : FIT® Permitting Software & Fees, Attachment G
_____ : Energy Management & Green Building Services & Fees, Attachment H
_____ : Planning & Zoning Services & Fees, Attachment I
_____ : Property Maintenance Services, Attachment J

4.0 CHANGES AND ADDITIONAL SERVICES

The City of Peculiar, Missouri may request addendums to the services outlined in the following attachments so that additional services not currently described can be added. Examples of addendums that can be included are specialty services, such as Property Maintenance Services, Contractor Licensing Services, Business Licensing Services, Public Works Inspections, and other services as needs are identified and documented by MARC, IBTS and/or Jurisdiction(s). If any such change causes an increase or decrease in the cost of or in the time required for performance of this Master Agreement, IBTS shall notify MARC in writing immediately, but, in any event, prior to executing an Agreement Modification. IBTS and MARC will negotiate the new terms and modify the Master Agreement as described in Section 15.0 – Agreement Modification.

5.0 USE OF REGISTERED TRADEMARKS

IBTS and the City of Peculiar, Missouri give mutual permission to each other to utilize each other's registered trademark and/or logos in all marketing materials, advertisements and public documents pertinent to the Scope of Services described in the attachments as long as this Service Agreement remains in effect.

6.0 FEE COLLECTION:

IBTS will collect the fees for all services as described in the attachments, with the exception of Property Maintenance Services. IBTS will retain fees for its services and report activity to the City. Reports will include the appropriate permit fee rebates.

The City of Peculiar, Missouri will be responsible for collecting all fees, fines and violations associated with Property Maintenance services.

6.1 PAYMENT TERMS AND PROCESS

IBTS in accordance with schedules attached to this Service Agreement, IBTS will utilize its existing credit card processing system, which includes acceptance of e-checks, to receive all fees associated with the services provided to the City of Peculiar, Missouri. IBTS will collect payment of fees from the applicant for appropriate services and will retain certain fees for its services and report activity to the City. IBTS agrees to pay all credit card and other banking or financing fees required in the transaction of, use of, maintenance, and other fees associated with the processing of transactions with a the credit card account.

Jurisdiction agrees to pay IBTS for services provided with 45 working days of receipt of invoice from IBTS.

Jurisdiction's Permit Fee Rebates – IBTS has provided suggested permit fees in the attached fees schedules. Each Jurisdiction shall establish permit fees for each permit type shown in the fee schedule. These permit fees, along with all other plan review, inspection, flood review, handling and other fees required for the permit, shall be paid to IBTS at the time the applicant submits the permit application. IBTS will rebate the City's permit fees to the City to cover their expenses to administer the permit process. IBTS will make rebate payments to each Jurisdiction for permit fees collected during the permitting process. Within 45 working days of the end of the month, IBTS will rebate to the City all permit fees collected by IBTS. A report describing all transactions will include the permit number, permit type, permit category and the date of the permit will accompany the rebate.

IBTS will reimburse the City's permit fees for services the City provides such as and including permitting and issuing the Occupancy Certificates and release to connect the utilities only after the inspections have been completed and the building has passed all IBTS inspections. Each Jurisdiction will establish these permit fees for each permit type shown the fee schedule. The Jurisdiction's established fees may vary from the suggested permit fees included the attached fee schedule.

IBTS will include the City of Peculiar's adopted permit fees as part of permitting software upon receipt of a resolution for the City that adopts and establishes those fees.

All rebate payments shall be made payable to: The City of Peculiar, Missouri. A report of all activity processed during the month shall accompany each payment. The payment shall be submitted with the report to: The City of Peculiar, Missouri, 250 S. Main Street, Peculiar, MO 64078.

The report shall include the following information, at a minimum, for the activity processed during the quarter:

1) Jurisdiction name
2) date fees were collected
3) permit number

4) permit category
5) permit type
6) plan review fees
7) inspection fees, and
8) calculation of jurisdiction's permit fees.

IBTS Plan Reviews, Inspection and Other Services Fees – IBTS will retain the amounts paid by the applicant for plan reviews, inspections and/or other services as described in the attached schedules to cover the building department services provided by IBTS.

7.0 TERM OF AGREEMENT

This initial two-year Service Agreement term shall begin on August 1st, 2014, and shall end on July 31st, 2016. After the expiration date of this Service Agreement, the Service Agreement and all subsequent amendments may be extended for additional two-year terms until either the City of Peculiar or IBTS terminates the Service Agreement by providing a 90-day written notice of termination in advance of expiration. During the term of the Service Agreement, the City of Peculiar, Missouri agrees to use IBTS as its exclusive provider of services selected. Prior to the start of each two-year extension, the rate of compensation and the handling fees will be negotiated as appropriate.

8.0 REFERENCES

The City of Peculiar, Missouri understands they are purchasing the services initialed in Section 3.0 Service Selection and agree to all terms listed herein, as well as the conditions and terms as described in the Master Agreement between IBTS and the Mid America Regional Council.

9.0 JURISDICTION-FURNISHED RESOURCES

The City of Peculiar shall appoint a Program Manager to coordinate the services for this Service Agreement. The assigned Program Manager shall be the principal point of contact on behalf of the City and will be the principal point of contact for IBTS concerning performance under this Service Agreement.

The City will pass ordinances to require fees, plan reviews, permits, inspections and code compliance by IBTS and establish enforcement mechanisms that shall be in accordance with federal and state law. The City of Peculiar, Missouri agrees to enforce the requirement and take administrative and legal action to enforce compliance with those ordinance requirements. IBTS shall comply with those ordinance requirements in the provision of services to the City.

The City will provide IBTS field inspector with a location, from time to time, for coordination with City personnel, filing reports and assisting citizens. If the City is providing permit issuance assistance, one of the City's personnel will handle the permits and receive the plans for review. The City shall also permit IBTS to use its printer or copier as necessary to support third party services.

10.0 IBTS-FURNISHED RESOURCES

IBTS will be fully responsible for its staff and all of its staff's needs including but not limited to: automobile, mileage, housing, per diems, cell phones, laptop computers and appropriate software, code books, safety equipment, tools for inspections, and certification costs.

11.0 NOTICES

All contractual notices shall be addressed to:

Institute for Building Technology and Safety (IBTS)
Attn: David Moreaux, Contracts Administrator
45207 Research Place
Ashburn, VA 20147

City of Peculiar
Attn: Clifford L. McDonald
250 S. Main Street
Peculiar, MO 64078

All technical notices shall be addressed to:

Institute for Building Technology and Safety (IBTS)
Attn: Greg Seldon, Director
45207 Research Place
Ashburn, VA 20147

City of Peculiar
Attn: Clifford L. McDonald
250 S. Main Street
Peculiar, MO 64078

12.0 ORDER OF PRECEDENCE

This Service Agreement shall, to the extent possible, be construed to give effect to all of its provisions; however, where provisions are in conflict, first priority shall be given to the provisions of the Service Agreement and its amendments; second priority shall be given to the Master Agreement and third priority shall be given to the provisions of the IBTS Scope of Services as described in the following Attachments and any amendments.

13.0 INCORPORATION OF ATTACHMENTS

Attachments selected by the City of Peculiar in Section 3.0 are attached hereto and are hereby incorporated by reference as though fully set out and rewritten herein.

IN WITNESS WHEREOF, the parties have executed this Service Agreement as of this _____ day of _____, 2014.

For IBTS:		For City of Peculiar:	
Printed Name:	_____	Printed Name:	Holly Stark
Title:	_____	Title:	Mayor
Signature:	_____	Signature:	_____
Date:	_____	Date:	_____

A1.0 AUGMENTATION SERVICES

IBTS will provide labor only staff to deliver the services called for in this agreement on a specific instance as requested by the City. The fees, per staff are outlined in each of the following attachments that describe services delivered.

IBTS will work with the jurisdiction to represent the city in the best manner possible by wearing uniforms with the jurisdiction's city seal, name and information as appropriate on the uniform. IBTS will also place the city's seal and department name on IBTS vehicles to identify the department(s) of the city being represented.

B1.0 BUILDING CODE DEPARTMENT SERVICES

IBTS will provide Building Code Department Services, administration, permitting systems, plan reviews, permit approvals, certificate of occupancy approvals and electronic record keeping. Permit applicants can come to the City of Peculiar's office to get permits, submit plans for plan reviews, or for Zoning and FEMA certifications; or they may elect to apply online once IBTS has implemented its proprietary online FIT® permitting system.

Permit Applications

Citizens/contractors may go to city hall to apply for a permit and submit the required documentation for the permit. Citizens/contractors may also choose to register online with IBTS FIT® software. In either case, a local jurisdiction staff person will enter and/or review the submitted information, receive the payment and submit to IBTS for review. Notifications are sent immediately to IBTS staff that Plan Reviews are pending.

Plan Reviews

As directed by the City, IBTS staff will conduct all of the plan reviews to check for compliance with federal, state and local building code requirements. The following represents the type of reviews (commercial and residential) that can be conducted, if so selected by each jurisdiction:

- Building codes
- Electrical codes
- Plumbing codes
- Mechanical codes
- Energy codes
- Accessibility
- Flood determinations
- Landscape/land use/lighting
- Fire codes
- Other local requirements

Permit Approvals & Issuance

Once plans are approved, IBTS will indicate approval in the FIT® software system. The system in return immediately notifies the jurisdiction that a permit is ready for issuance. The jurisdiction having authority remains in control in order to issue permits and each jurisdiction can hold the approval for issues or concerns. This provides the opportunity to hold final issuance for any reason the jurisdiction may deem necessary.

Inspections

Once a project is under construction, IBTS will provide inspections on the construction project, based upon the structure type of occupancy. IBTS will provide each contractor with a direct telephone number to the inspector in order to schedule the inspections; inspections can also be requested via fax request or on the web-based permitting solution.

Certificates of Occupancy

After the final inspection or the Certificate of Occupancy (CO) inspection is completed, IBTS will upload and document all of the results and reports from the inspections in the FIT® software. IBTS will then approve the CO for issuance and the software will notify the City that a CO is ready to be issued. The jurisdiction at that time, just like the permit, has the authority to withhold that CO if deemed necessary. This provides the City with ultimate control of allowing the occupancy of the structure.

B2.0 BUILDING CODE DEPARTMENT FEES

RESIDENTIAL FEE SCHEDULE					
ITEM	**SQ.FT.**	**Jurisdiction Suggested Permit Fees**	**IBTS Plan Reviews**	**IBTS Inspections**	**MARC Handling**
New Construction	0-3,000	Suggested Permit Fees are $50 each	$250.00	$625.00	1.5% of plan review and inspection fees retained by MARC. See Master Agreement for full details.
	3,001-5,000		$390.00		
	>5,001		$490.00		
New Modular	ALL		$150.00	$250.00	
New Addition/ Remodel	0-2,000		$390.00	$250.00	
	2,001-5,000		$565.00		
	5,001 >		$765.00		
New Manufactured Housing	ALL		n/a	$250.00	
New Detached Accessory	ALL		$165.00	$300.00	
New Portable Building	ALL		$75.00	$150.00	
Structure Relocation (Move)	ALL		$185.00	$250.00	
Swimming Pool	ALL		$165.00	$300.00	
MISCELLANEOUS	**SQ.FT.**	**Jurisdiction Suggested Permit Fees**	**IBTS Plan Reviews**	**IBTS Inspections**	**MARC Handling**
1st Re-Inspection	n/a	n/a	n/a	n/a	1.5% of plan review and inspection fees retained by MARC. See Master Agreement for full details.
2nd Re-Inspection		n/a		$90.00	
3rd Re-Inspection		n/a		$150.00	
Roofing Inspection		Suggested Permit Fees are $25 each		$100.00	
Electrical Meter Change				$75.00	
Mechanical Trade Inspection				$75.00	
Electrical Trade Inspection				$75.00	
Plumbing Trade Inspection				$75.00	
Demolition				$75.00	
Change of Occupancy				$75.00	
Change of Contractor				n/a	
Permit Extensions				n/a	
Decks				$150.00	
Temporary Pole				$75.00	
All Stop Work Orders		$250.00		n/a	
Re-Roof		$25		$150.00	
Flood Determination Review		n/a		$65.00	

EXAMPLE: 2000 sq. ft. home

Permit Fees	$125.00
Plan Review	$250.00
Bldg Inspect	$625.00
Mech Inspect	$75.00
Elec Inspect	$75.00
Plumbing Inspect	$75.00
Handling Fees	$14.30
FEE TOTALS	**$1,239.30**

FEE BREAKDOWN

Jurisdiction Fees	$125.00
MARC Fees	$14.30
IBTS Fees	$1,100.00
FEE TOTAL	**$1,239.30**

COMMERICAL BUILDING CODE FEE SCHEDULE								
GROUPS	**OCCUPANCY**	**SQUARE FOOTAGE**		**JURISDICTION SUGGESTED PERMIT FEES**	**IBTS CODE REVIEW FEE** (INCLUDES 1 REJ. REVIEW)	**IBTS 3rd PLAN REVIEW**	**IBTS CODE INSPECTION FEE**	**MARC HANDLING FEES**
		Minimum	Maximum					
A	ASSEMBLY	0	2,500	$100.00	$385.00	$175.00	$1,250.00	1.5% of plan reviews and inspections; $300 maximum See Master Agreement for full details
		2,501	4,500		$650.00			
		4,501	10,000		$1,300.00		$1,500.00	
		10,001	50,000		$1,850.00	$300.00	$2,800.00	
		50,001	100,000		$3,250.00		$4,000.00	
		100,000	300,000		$4,500.00		$8,500.00	
		300,001 +			$4,500 + .01 sq.ft. over 300,000	$500.00	$8,500 + .01 sq.ft. over 300,000	
1-2, 1-3	HEALTH CARE, INSTITUTIONAL, OR DETENTION (Includes Limited Care & Assisted Living)	0	2,000	$100.00	$385.00	$125.00	$1,000.00	
		2,001	5,000		$650.00		$1,500.00	
		5,001	10,000		$1,300.00		$1,850.00	
		10,001	20,000		$1,650.00	$200.00	$4,095.00	
		20,001	30,000		$2,450.00		$5,265.00	
		30,001	50,000		$3,475.00		$7,020.00	
		50,001	100,000		$4,275.00		$11,700.00	
		1,000,001	300,000		$5,500.00	$325.00	$21,000.00	
		300,001 +			$5,500 + .01 sq.ft. over 300,00		$21,000 + .01 sq.ft. over 300,000	
M & B	BUSINESS OR MERCANTILE	0	3,000	$100.00	$415.00	$125.00	$750.00	
		3,001	10,000		$825.00		$1,755.00	
		10,001	30,000		$1,550.00		$2,575.00	
		30,001	80,000		$2,225.00	$200.00	$4,650.00	
		80,001	150,000		$3,000.00		$9,900.00	
		150,001	300,000		$5,125.00		$14,625.00	
		300,001 +			$5,125 + .01 sq.ft. over 300,000		$14,625 + .01 sq.ft. over 300,000	
E & 1-4	EDUCATIONAL & DAYCARE	0	5,000	$100.00	$650.00	$175.00	$1,500.00	1.5% of plan reviews and inspections; $300 maximum See Master Agreement for full details
		5,001	10,000		$1,150.00		$1,875.00	
		10,001	30,000		$1,900.00		$4,365.00	
		30,001	80,000		$3,150.00	$300.00	$9,945.00	
		80,001	150,000		$4,900.00		$17,550.00	
		150,001	300,000		$7,850.00		$43,875.00	
		300,001 +			$7,850 + .01 sq.ft. over 300,000	$500.00	$43,875 + .01 sq.ft. over 300,000	
F1, F2, S1,S2, & U	INDUSTRIAL OR STORAGE	0	10,000	$100.00	$550.00	$125.00	$750.00	
		10,001	20,000				$750.00	
		20,001	50,000				$1,250.00	
		50,001	100,000				$1,250.00	
		100,001	200,000				$1,250.00	
		$200,001 +			$550 + .01 sq.ft. over 200,000		$1,250 + .01 sq.ft. over 200,000	
H1, H2, H3, H4,	HIGH HAZARD	0	2,000	$100.00	$725.00	$125.00	$1,000.00	
		2,001	5,000		$1,100.00		$1,200.00	

& H5		5,001 +			$1,100 + .02 sq.ft. over 5,000		$1,200 + .01 sq.ft. over 5,00	
R1, R2, R3, R4, I-1	HOTELS, DORMS, APARTMENTS, LODGING, ROOMING, & RESIDENTIAL CARE FACILITIES	0	2,500	$100.00	$550.00	$150.00	$1,500.00	
		2,501	10,000		$1,250.00		$1,872.00	
		10,001	30,000		$1,800.00		$4,680.00	
		30,001	50,000		$3,250.00		$9,945.00	
		50,001	150,000		$4,200.00	$225.00	$17,550.00	
		150,001	300,000		$5,425.00		$43,875.00	
		300,001 +			$5,425 + .01 sq.ft. over 300,00		43,875 + .01 sq.ft. over 300,00	

BUILDING DEPARTMENT SERVICES AUGMENTATION FEE SCHEDULE		MARC FEES
Residential Plan Reviews	See residential plan review fee schedule	1.5% of plan reviews
Residential Inspections	$100 per inspection	1.5% of inspections
Commercial Plan Reviews	See commercial plan review fee schedule	1.5% of plan reviews; $300 maximum
Commercial Inspections	$175 per inspection	1.5% of plan reviews and inspections; $300 maximum

D1.0 ACCESSIBILITY PLAN REVIEW AND INSPECTION SERVICES

IBTS will provide Accessibility Plan Review and Inspection Services and will perform site visits. As permitted by the completeness of information submitted for code plan review, IBTS will conduct the accessibility plan reviews during the building department plan reviews in order to streamline the process. However, should accessibility not be fully addressed within the original submission, additional review may be necessary.

IBTS staff will provide the accessibility technical reviews and inspections on commercial use group properties. IBTS will review drawings and inspect structures for these codes requirements for compliance to the locally adopted codes. IBTS staff will attach Plan Reviews and Inspection result records to each permit which can be archived for easy retrieval for future purposes.

All accessibility reviews and inspections will be documented and recorded in the FIT® Permitting System software. Each review and inspection report will be available from any web-enabled access devise such as internet tablets and pads.

D2.0 ACCESSIBILITY SERVICES FEES

D2.1 Built-In Fees: Fees for accessibility reviews and inspections are included in the fees for the building code plan reviews and inspections found in Attachment B.

D2.2 Plan Review Only: Should an applicant desire to have reviews only conducted on a commercial structure, the following fees are applicable.

TYPE	IBTS FEES*	MARC HANDLING FEES**
All Commercial Structures, <5,000 sq. ft	$500.00 each	1.5%
All Commercial Structures, 5,001 – 25,000 sq.ft	$800.00 each	1.5%
All Commercial Structures, 25,001 – 100,000 sq.ft	$1,350.00 each	1.5%
All Commercial Structures, >100,001 sq.ft	$1,600.00 each	1.5%

******Fees applicable for augmentation services*
*******1.5% of IBTS fees*

E1.0 FIRE CODE PLAN REVIEW & INSPECTION SERVICES

IBTS will provide code plan review and inspections services, permit approvals, certificate of occupancy approvals and electronic record keeping for commercial structures. Permit applicants can come to City Hall to get permits, submit plans for plan reviews, or for Zoning and FEMA certifications; or they may elect to apply online once IBTS has implemented its proprietary online FIT® permitting system.

Plan Reviews

As directed by the City, IBTS staff will conduct all of the plan reviews to check for compliance with federal, state and local building fire code requirements. These reviews will be conducted during the same time as the building code and accessibility reviews.

Permit Approvals

The permit approval process will follow the same steps for processing permits as described in Attachment B - Building Code Department Services.

Inspections

Once the project is under construction, IBTS will provide inspections on the construction project, based upon the structure type of occupancy. IBTS will provide each contractor with a direct telephone number to the inspector in order to schedule the inspections; inspections can also be requested via fax request or on the web-based permitting solution.

Certificates of Occupancy

After the final inspection or the Certificate of Occupancy (CO) inspection is completed, IBTS will upload and document all of the results and reports from the inspections in the FIT® software. IBTS will then approve the CO for issuance and the software will notify the City that a CO is ready to be issued. The jurisdiction at that time, just like the permit, has the authority to withhold that CO if deemed necessary. This provides the City with ultimate control of allowing the occupancy of the structure.

IBTS, upon direction from the City, will coordinate the CO inspection with the local and/or State Fire Marshal as required to ensure that all of their requirements have been satisfied before occupancy is allowed.

E2.0 FIRE CODE REVIEW & INSPECTION SERVICES FEES

FIRE CODE FEE SCHEDULE					
GROUPS	OCCUPANCY	SQUARE FOOTAGE	IBTS FIRE REVIEW FEE*	IBTS FIRE INSPECTION FEE*	MARC Handling Fee
A	ASSEMBLY	ALL	$500.00	$500.00	1.5 % of Plan Review and Inspection Fees. See agreement for more details.
I-2, I-3	HEALTH CARE, INSTITUTIONAL, OR DETENTION (Includes Limited Care & Assisted Living)	ALL	$500.00	$500.00	
M & B	BUSINESS OR MERCANTILE	ALL	$500.00	$500.00	
E & 1-4	EDUCATIONAL & DAYCARE	ALL	$500.00	$500.00	
F1, F2, S1,S2, & U	INDUSTRIAL OR STORAGE	ALL	$250.00	$500.00	
H1, H2, H3, H4, & H5	HIGH HAZARD	ALL	$500.00	$500.00	
R1, R2, R3, R4, I-1	HOTELS, DORMS, APARTMENTS, LODGING, ROOMING, & RESIDENTIAL CARE FACILITIES	ALL	$500.00	$500.00	

******Fees applicable for augmentation services*

F1.0 STORM WATER SERVICES

IBTS will provide Storm Water Pollution Prevention Plan (SWPPP) reviews and site inspections. These services will be provided on all residential and commercial structures as required by local, state and or federal laws regulating storm water pollution.

SWPPP Reviews

IBTS will provide the SWPPP reviews at the same time as the Building Code reviews. IBTS will ensure that the necessary state permits have been obtained and are on file with the construction permit.

IBTS will also maintain any necessary sub-division Master Plans as allowable by regulations. The Master Plan will be reviewed only once, and thereafter, IBTS will confirm that contractors have signed the necessary agreements that they as well as the sub-contractors will follow the Master SWPPPs.

SWPPP Site Visits

IBTS will conduct SWPPP inspections at each code inspection to verify ongoing compliance of the SWPPP requirements at the job site. Records of inspection results will be recorded and archived with the construction permit for record keeping and archival purposes

In the event of a rainfall event, IBTS will conduct spot checks for records after the rainfall event has passed, but no sooner than 24hrs so as to allow the site manager to complete all paperwork. IBTS will verify that storm water pollution plans are in place and remain effective after the rainfall event.

F2.0 STORM WATER SERVICE FEES

F2.1 Fees for storm water reviews and inspection are included in the fees for the building code plan reviews and inspections found in Attachment B.

F2.2 Fees for augmentation services are below

STORM WATER AUGMENTATION SERVICE FEES		
TYPE	**IBTS FEES***	**MARC HANDLING FEES**
All residential structures	$150.00 each	1.5%
All commercial structures	$300.00 each	1.5%

******Fees applicable for augmentation services*

G1.0 FIT® Software

IBTS will use its proprietary FIT® permitting software in the execution of these services when a jurisdiction selects IBTS to provide Building Code Department Services. The configuration of fees and permit types will be based upon the negotiated types and fees as described in the Master Agreement, Service Agreement and the Agreement Attachments thereof.

G1.1 – FIT® Permitting Software At No Cost: IBTS will provide its proprietary FIT® Permitting Software to the City of Peculiar if selected, to use IBTS as their Building Code Department Service provider as described in the Master Agreement, Service Agreement and the attachments thereof.

G1.2 – FIT® Permitting Software For Lease: Should the City elect to use only IBTS' FIT® Permitting Software, and no other services, MARC has negotiated specific fees for the lease of the software only. The City would be required to work directly with IBTS to execute a separate Software Licensing Agreement based upon the below FIT® Fee Schedule.

The standard configuration of fees and permit types, as described in the Master Agreement, Service Agreement and Agreement Attachments are included in the "Standard Configuration Fees." Any additional configuration or changes outside the standard configuration for fees and permit types to the FIT® software is considered customization and will require additional time, labor, and materials subject to additional fees.

If the City elects to use only IBTS' FIT® Permitting Software, and no other services, the City will be required to pay for configuration costs, handling fees as well as a per permit usage fees for hosting, bandwidth and digital storage as shown below.

IBTS will provide FIT® software that provides, at a minimum, the following features:

A web-based permitting system that allows for:

- Online applications
- Online permit payments
- Online permit tracking
- Automatic notification when
    - The permit application is submitted and payments are received
    - Plan reviews are completed
    - Permits are issued (along with the permit being provided)
    - Inspection results and reports are complete
    - Certificates of Occupancy (CO) are issued
- An applicant portal that can:
    - Upload drawings, specifications and attach to the application
    - Request inspections
    - Print receipts, applications, permits, inspection reports and certificates of occupancy
    - Upload flood plain, storm water and other construction documents

- User role based functionality
- Provides transparent checks and balances
- Provides live, real-time reporting
- Access to all documents attached to the permit

IBTS Technology Services Department will also work closely with the City to develop the necessary links from their website to FIT® so that citizens and contractors alike can easily access the permitting system.

G2.0 – FIT® Permitting Software Fees

FIT® PERMITTING SOFTWARE	IBTS FEE	MARC Handling Fee*
FIT® Standard Configuration Fee Per Jurisdiction	$4,000.00	$60.00 each
FIT® Customization Fee	$150.00/ hour	1.50%
FIT® Per Permit Usage Fee (0-500 permits)	$5.00 each	
FIT® Per Permit Usage Fee (501-2,500 permits)	$4.00 each	
FIT® Per Permit Usage Fee (>2,500 permits)	$2.00 each	

**1.5% of IBTS fees*

G3.0 – FIT SERVICE AGREEMENT

FIT® SOFTWARE SERVICE AGREEMENT
Welcome to FIT®

THIS LEGAL AGREEMENT BETWEEN YOU AND IBTS GOVERNS YOUR USE OF THE FIT® PRODUCT, SOFTWARE, SERVICES, AND WEBSITES (COLLECTIVELY REFERRED TO AS THE "SERVICE"). IT IS IMPORTANT THAT YOU READ AND UNDERSTAND THE FOLLOWING TERMS.

IBTS is the provider of the Service, which permits you to utilize certain internet services, including all modules and portals, and making it accessible on your compatible devices and computers, and certain location based services, only under the terms and conditions set forth in this Agreement. As soon as you commence using FIT® services, your data/information will be automatically sent to and stored by IBTS. "IBTS" as used herein means:

- IBTS HQ Ashburn, VA, located at 45207 Research Place, Ashburn, VA 20147;
- IBTS Austin, TX, located at 8705 Shoal Creek, Suite 214, Austin, Texas 78757;
- IBTS Bossier City, LA, located at 707 Benton Road, Suite 100, Bossier City, LA 71111;
- IBTS Houston, TX, located at 820 Lawrence Road, League City, Texas 77573;
- IBTS Somerset, PA, located at 421 Georgian Place, Somerset, Pennsylvania 15501;
- IBTS Troy, NY, located at 120 Defreest Drive, Troy, NY 12180; and,
- IBTS Washington, DC, located at 7059 Blair Road NW, Suite 200, Washington, DC 20012.

REQUIREMENTS FOR USE OF THE SERVICE
The Service is available to selected jurisdiction staff and all city individuals based on roles. Use of the Service requires compatible computers, Internet access, and certain software (fees may apply); may require periodic updates; and may be affected by the performance of these factors. IBTS reserves the right to limit the number of Accounts that may be associated with any field-grade inspection device. Internet access is necessary for use. The latest version of required software/browser is recommended to access the Service and may be required for certain transactions or features. Meeting these requirements, which may change from time to time, is your responsibility.

Use of Location-based Services
IBTS and licensors may provide certain features or services through the Service that rely upon device-based location information, which use GPS (where available), along with crowd-sourced Wi-Fi hotspot and cell tower locations. To provide such features or services, where available, IBTS and licensors must collect, use, transmit, process and maintain your location data, including the real-time geographic location of your device, and you hereby agree and consent to IBTS's and licensors' collection, use, transmission, processing and maintenance of such location data to provide such services. In addition, by enabling and/or using any location-based services or features within the Service (GPS Routing, etc.), you agree and consent to IBTS and licensors transmitting, collecting, using, processing and maintaining information related to your FIT® account ("Account"), and any devices registered thereunder, for purposes of providing such location-based service or feature to you, and use of your location data and location search queries to provide and improve location-based and road traffic-based products and services. Such information may include, but is not limited to, your IBTS ID, device ID and name, device type and real-time geographic location of your device at time of your request. Any location data provided by the Service is not intended to be relied upon in situations where precise location information is needed or where erroneous, inaccurate, time-delayed or incomplete location data may lead to death, personal injury, property or environmental damage. IBTS shall use reasonable skill and due care in providing the Service, IBTS does not guarantee the availability, accuracy, completeness, reliability, or timeliness of location data or any other data displayed by the Service.

Stolen Field-Grade Equipment/Devices
IBTS employs anti-theft software on all field-grade equipment/devices that it sells, or leases. When your field-grade equipment/device is lost or stolen, it can be remotely and immediately disabled. And, if your field-grade equipment/device is recovered, all data can be quickly reactivated to full functionality.

Limitations on Use
You agree to use the Service only for purposes as permitted by this Agreement and any applicable law, regulation, or generally accepted practice in the applicable jurisdiction. If your use of the Service or other behavior intentionally or unintentionally threatens IBTS's ability to provide the Service or other systems, IBTS shall be entitled to take all reasonable steps to protect the Service and IBTS's systems, which may include suspension of your access to the Service.

Fees
The Service accepts credit cards, certain payment accounts, and checks for payment. IBTS may obtain preapproval for an amount up to the amount of the transaction. Billing occurs at the contractually agreed upon times.

YOU ARE RESPONSIBLE FOR THE TIMELY PAYMENT OF ALL FEES. All fees will be billed to the jurisdiction, or office you designate, at regularly scheduled times. If IBTS is unable to successfully collect payment for fees due, IBTS reserves the right to revoke or restrict access to your stored Content, or terminate your services.

Account Information and Billing Inquiries
You may consult your jurisdiction-specific contract for details on your Account information including payment method and billing cycles. IBTS will send an electronic invoice to your designated billing recipient email address. If you believe you have been billed in error for the Service please notify us immediately at info@ibts.org.

Changes in Per Case Use Costs
Per Case Use Cost changes and institution of new charges implemented during your Service billing year will apply to subsequent billing years and to all new applicable permits after the effective date of the change.

Your Use of the Service / Your Account
As a registered user of the Service, you shall be provided with an Account. Don't reveal your Account information to anyone else. You are solely responsible for maintaining the confidentiality and security of your Account and for all activities that occur on or through your Account, and you agree to immediately notify IBTS of any security breach of your Account. You further acknowledge and agree that the Service is designed and intended for JURISDICTION use and you should not share your Account and/or password details with another individual. Provided we have exercised reasonable skill and due care, IBTS shall not be responsible for any losses arising out of the unauthorized use of your Account resulting from you not following these rules.

In order to use the Service, you must enter your IBTS ID and password to authenticate your Account. You agree to provide accurate and complete information when you register with, and as you use, the Service, and you agree to update your Service Registration Data to keep it accurate and complete. Failure to provide accurate, current and complete Service Registration Data may result in the suspension and/or termination of your Account. You agree that IBTS may store and use the Service Registration Data you provide for use in maintaining and billing fees to your jurisdiction.

Additional Obligations or Terms of Use
Particular modules or features of the Service provided by IBTS and/or its licensors, including but not limited to the ability to use inspection forms on an Apple iPad, require separate software or other license agreements or terms of use. You must read, accept, and agree to be bound by any such separate agreement as a condition of using these particular components or features of the Service.

No Conveyance
Nothing in this Agreement shall be construed to convey to you any interest, title, or license in an IBTS ID, email address, domain name, or similar resource used by you in connection with the Service.

No Resale of Service
You agree that you will not reproduce, copy, duplicate, sell, resell, rent or trade the Service (or any part thereof) for any purpose.

IBTS Privacy Policy
You understand that by using the Service, you consent and agree to the collection and use of certain information about you and your use of the Service in accordance with IBTS's Privacy Policy. You further consent and agree that IBTS may collect, use, transmit, process and maintain information related to your Account, and any devices or computers registered thereunder, for purposes of providing the Service, and any features therein, to you. Information collected by IBTS when you use the Service may also include technical or diagnostic information related to your use that may be used by IBTS to support, improve and enhance IBTS's products and services.

Content and Your Conduct
Content
"Content" means any information that may be generated or encountered through use of the Service, such as data files, device characteristics, written text, photographs, images, messages and any other like materials. You understand that all Content, whether publicly posted or privately transmitted on the Service is the sole responsibility of the person from whom such Content originated. This means that you, and not IBTS, are solely responsible for any Content you upload, download, post, email, transmit, store or otherwise make available through your use of the Service. IBTS does not control the Content posted via the Service, nor does it guarantee the accuracy, integrity or quality of such Content. You understand and agree that your use of the Service and any Content is solely at your own risk.

Your Conduct
You agree that you will NOT use the Service to:

a. upload, download, post, email, transmit, store or otherwise make available any Content that is unlawful, harassing, threatening, harmful, tortious, defamatory, libelous, abusive, violent, obscene, vulgar, invasive of another's privacy, hateful, racially or ethnically offensive, or otherwise objectionable;

b. pretend to be anyone, or any entity, you are not — you may not impersonate or misrepresent yourself as another person, entity, another FIT® user, an IBTS employee, or a civic or government leader, or otherwise misrepresent your affiliation with a person or entity; and, or

c. engage in any copyright infringement or other intellectual property infringement, or disclose any trade secret or confidential information in violation of a confidentiality, employment, or nondisclosure agreement.

Access to Your Account and Content
IBTS reserves the right to take steps IBTS believes are reasonably necessary or appropriate to enforce and/or verify compliance with any part of this Agreement. You acknowledge and agree that IBTS may, without liability to you, access, use, preserve and/or disclose your Account information and Content to law enforcement authorities, government officials, and/or a third party, as IBTS believes is reasonably necessary or appropriate, if legally required to do so or if we have a good faith belief that such access, use, disclosure, or preservation is reasonably necessary to: (a) comply with legal process or request; (b) enforce this Agreement, including investigation of any potential violation thereof; (c) detect, prevent or otherwise address security, fraud or technical issues; or (d) protect the rights, property or safety of IBTS, its users, a third party, or the public as required or permitted by law.
Content Submitted or Made Available by You on the Service

Trademark Information
IBTS, the IBTS logo, FIT®, the FIT® logo and other IBTS trademarks, service marks, graphics, and logos used in connection with the Service are trademarks or registered trademarks of IBTS in the US and/or other countries. Other trademarks, service marks, graphics, and logos used in connection with the Service may be the trademarks of their respective owners. You are granted no right or license in any of the aforesaid trademarks, and further agree that you shall not remove, obscure, or alter any proprietary notices that may be affixed to or contained within the Service.

Software
IBTS's Proprietary Rights
You acknowledge and agree that IBTS and/or its licensors own all legal right, title and interest in and to the Service, including but not limited to graphics, user interface, the scripts and software used to implement the Service, and any

software provided to you as a part of and/or in connection with the Service (the "Software"), including any and all intellectual property rights that exist therein, whether registered or not, and wherever in the world they may exist. You further agree that the Service (including the Software, or any other part thereof) contains proprietary and confidential information that is protected by applicable intellectual property and other laws, including but not limited to copyright. You agree that you will not use such proprietary information or materials in any way whatsoever except for use of the Service in compliance with this Agreement. No portion of the Service may be reproduced in any form or by any means, except as expressly permitted in these terms.

Indemnity

You agree to defend, indemnify and hold IBTS, directors, officers, employees, agents, contractors, and licensors harmless from any claim or demand, including reasonable attorneys' fees, made by a third party, relating to or arising from: (a) any Content you submit, post, transmit, or otherwise make available through the Service; (b) your use of the Service; (c) any violation by you of this Agreement; (d) any action taken by IBTS as part of its investigation of a suspected violation of this Agreement or as a result of its finding or decision that a violation of this Agreement has occurred; or (e) your violation of any rights of another.

Notices

IBTS may provide you with notices regarding the Service, by email to your account email address (and/or other alternate email address associated with your Account if provided), by regular mail, or by postings on our website and/or the Service.

Governing Law

Except to the extent expressly provided in the following paragraph, this Agreement and the relationship between you and IBTS shall be governed by the laws of the State of Virginia. You and IBTS agree to submit to the personal and exclusive jurisdiction of the courts located within the county of Loudoun, California, to resolve any dispute or claim arising from this Agreement.

General

This Agreement constitutes the entire agreement between you and IBTS, governs your use of the Service and completely replaces any prior agreements between you and IBTS in relation to the Service. You may also be subject to additional terms and conditions that may apply. If any part of this Agreement is held invalid or unenforceable, that portion shall be construed in a manner consistent with applicable law to reflect, as nearly as possible, the original intentions of the parties, and the remaining portions shall remain in full force and effect. The failure of IBTS to exercise or enforce any right or provision of this Agreement shall not constitute a waiver of such right or provision.

© Copyright 2012 Institute for Building Technology and Safety (IBTS). All rights reserved.

H1.0 ENERGY AND GREEN BUILDING SERVICES

IBTS will provide Energy Management and Green Building Services as described herein. These services are provided by IBTS to the Jurisdiction on an as request basis and requires coordination between the Jurisdiction, IBTS and MARC to gather and understand the exact needs.

For each request, IBTS agrees to develop, the necessary programs that are solicited by the jurisdiction. IBTS will perform reviews and necessary on-site visits as specified herein and as may be required for each individual project. IBTS will coordinate all service delivery efforts with MARC to ensure that same or similar energy services are made available to all other MARC members.

Service categories being provided by IBTS include:

- Energy Savings Performance Services
- Building Energy Portfolio Programs
- Green / LEED / HERS / Energy Star Services
- Building Energy Envelope & Air Barrier Inspections/Testing
- Energy Efficiency Program Development
- Solar Photovoltaic Quality Assurance

IBTS will provide a detailed Technical Proposal for any Energy Management and Green Building Services selected by the Jurisdiction; fees will be based upon the below fee schedule.

ENERGY EFFICIENCY SERVICE FEES	IBTS FEE	MARC Handling Fees
Energy Efficiency Project Manager	$130.00 / hour	See below [1]
Energy Efficiency Commercial Auditors / Inspectors	$120.00 / hour	
Energy Efficiency Residential Auditors / Inspectors	$90.00/ hour	
LEED Commercial Verifications	$120.00 / hour	
LEED for Homes Residential Verification	$2,500.00 each	1.5 %
Green Verification for Commercial	$90.00 / hour	1.5%
Green Verification for Residential	$925.00 each	1.5 %
Residential Energy Star® Verification	$1,000.00 each home	1.5 %
Commercial Energy Star® Verification	$90.00 / hour	See below [1]
*** All services are quoted separately and quotes are based upon the specific needs of each jurisdiction. IBTS will provide energy efficiency services pricing tailored to jurisdiction requirements and preferred fee structures.*		

[1]MARC Handling Fee For Energy Services	
Handling Fees for projects less than $25,000.00	$250.00 per project
Handling Fees for projects from $25,000.00 to $100,000.00	$500.00 per project
Handling Fees for projects from $100,000.01 to $500,000.00	$750.00 per project
Handling Fees for projects over $500,000.01	$1,000.00 per project

I1.0 PLANNING AND ZONING MANAGEMENT

IBTS will provide Planning and Zoning Management solutions focus on the utilization of contemporary ideas and technology within a small town and rural context. IBTS will coordinate efforts with the [jurisdiction name here] Planning & Zoning Commission to administrate the following:

- Zoning Code Interpretation
- Zoning Review and Enforcement
- Planning and Zoning Commission Support
- Zoning Code Recommendation
- Zoning Code Implementation
- Parcel Map Digitization (if selected)
- Zoning Map Creation and Maintenance (if selected)

I2.0 PLANNING AND ZONING INSPECTIONS

IBTS will conduct enforcement of the local zoning ordinances as adopted. The Zoning Administrator will review all the required Development Permits, Development Permit Approvals, Zoning Reviews and full administration of the Zoning Ordinance. IBTS will attend each Development Review Committee meeting to be informed and aware of upcoming projects. Zoning administration will provide the following:

- Site Inspections
- Setbacks
- Accessory Use
- Traffic Corner Visibility
- Public Notification
- Nonconforming Buildings
- Landscape & Screening
- Signs / Billboards

I3.0 PLANNING AND ZONING ORDINANCE REVIEW

IBTS will review and recommend revisions as necessary to the current adopted Zoning code . IBTS will assess the current character and desires of the [jurisdiction name here] to revise the code appropriately. IBTS will develop, implement, manage and conduct planning and zoning activities for the [jurisdiction name here]. IBTS will provide information concerning zoning to the general public, builders, developers, Mayor, City Council and Planning and Zoning Commission. In addition, IBTS will develop and recommend policies and procedures for all Planning and Zoning activities.

I3.0 GEOGRAPHICAL INFORMATION SERVICES (GIS)

With the adoption of a new Zoning Code, it would be advantageous to create a zoning map. A current zoning map would help the [jurisdiction name here] administer the zoning ordinance. IBTS can assist in this endeavor and recommends the city contact the Mid America Regional Council for creation of this map. A digital parcel map can aid in the following:

- Creation of zoning map
- Basis for future land use analysis
- Regeneration of base tax map to recoup lose tax revenue
- Cost efficient Communication

I4.0 PLANNING & ZONING FEES

Description	Processing Fee*	Ad Fee*	MARC Fees
Rezoning	$375 plus $75/acre over the first	$100.00	1.5% of Processing Fee Only See Master Agreement for further details
Zoning Verification Letter	$50/$100 per location	N/A	
Subdivision With or Without Waiver	$300 plus $25/lot	$100 if over 2 acres	
Town Home Development	$300 plus $25/lot	$100 if over 2 acres	
Preliminary Subdivision Plat	$300 plus $25/lot	$100 if over 2 acres	
Revision to Approved Preliminary Plat (Public	$300 plus $25/lot	$100	
Revision to Approved Preliminary Plat (Staff	$100 plus $25/lot	N/A	
Final Plat Approval including PUD	$200 plus $25/lot	N/A	
Final Plat Revision including PUD (Public Hearing)	$200 plus $25/lot	$100	
Final Plat Revision including PUD (Staff Level)	$100	N/A	
Preliminary Subdivision Plat Extension	$100	N/A	
Bond and Agreement Review	$100	N/A	
Exchange of Property	$100	$100 if over 2 acres	
Combination of Lots	$100 plus $25/lot each original lot	$100 if over 2 acres	
Site Plan (Public Hearing)	$400	$100	
Site Plan (Staff Level)	$200	N/A	
Paving Waiver	$100	$100	
Parking Waiver	$100	$100	
Revocation	$200	$100	
Wireless Tower Site Plan	$400	$100	
Reasonable Accommodation for Group Home	N/A	N/A	
Mobile Home Park	$500 plus $25/lot	$100	
Major Street Plan Amendment	$500	$100	
Planned Unit Development Concept Plan	$500 plus $100/acre over 20 acres	$100	
Planned Unit Development Final Development Plan	$300	$100	
Small Planned Unit Development	$500 plus $100/acre over 2.5 acres	$100	
Street Name Change	$200 plus $3 for each Abutting Property Owner	$100	
Major Street Setback Reduction	$100	N/A	
Conditional Use Permit	$400 plus $75/acre after first acre	$100	
UDC Text Amendment	$500	$100	
Enterprise Zone	$100	N/A	
Demolition or Relocation	$200	$100	
Opinion of Appropriateness	$50	N/A	
Certificate of Appropriateness	$100	$100	
Local Landmark/District Designation	$100/$500	$100	
TND General Implementation Plan	$3000 plus $100/acre over 50 acres	$100	
TND Specific Implementation Plan	$1,000	$100	
Final TND Major Site Change	$1,000	$100	
Final TND Major Use Change	$1,000	$100	
Final TND Minor Change	$500	N/A	

**MARC Fees are 1.5% of the processing fees only since the AD Fees are direct costs*

RESOLUTION 2014 -39

A RESOLUTION OF THE BOARD OF ALDERMEN OF THE CITY OF PECULIAR, MISSOURI AUTHORIZING THE MAYOR TO ENTER INTO A CONTRACT WITH THE INSTITUTE FOR BUILDING TECHNOLOGY AND SAFETY (IBTS) FOR THE PURPOSE OF SECURING PLAN REVIEW AND CONSTRUCTION INSPECION SERVICES FROM AUGUST 1ST, 2014 THRU JULY 31ST 2016.

WHEREAS, the Mid-America Regional Council (MARC), with IBTS has made available to the City of Peculiar, Missouri regional building code services for consideration; and

WHEREAS, IBTS is a nonprofit organization whose purpose is to assist local Jurisdictions and regional councils by delivering quality services that meet the challenges of governance at all levels while enhancing public safety, economic development and the general welfare of the community; and

WHEREAS, the City of Peculiar, Missouri recognizes the safety and other energy benefits achieved from code compliance of residential and commercial structures; and

WHEREAS, the City of Peculiar, Missouri desires to participate in the regional services negotiated by MARC with IBTS by entering into this Service Agreement with IBTS for the services described:

NOW, THEREFORE BE IT RESOLVED BY THE BOARD OF ALDERMEN OF THE CITY OF PECULIAR, MISSOURI

Section 1. The Mayor is authorized to execute the referenced contract with IBTS.

Section 2. *Effective Date*. The effective date of this resolution shall be the 21st day of July, 2014.

Upon a roll call, said Resolution was adopted by the following vote:

Alderman Fines	_____	Alderman Ray	_____
Alderman Ford	_____	Alderman Roberts	_____
Alderman McCrea	_____	Alderman Turner	_____

APPROVED: ATTEST:

_____ _____

Holly Stark, Mayor Nick Jacobs, City Clerk

City Administrator
Brad Ratliff

City Clerk
Nick Jacobs

City Engineer
Carl Brooks

Business Office
Trudy Prickett

Chief of Police
Harry Gurin

City Planner
Cliff McDonald

City Attorney
Reid Holbrook

Parks Director
Nathan Musteen

Municipal Offices – 250 S. Main Street, Peculiar, MO 64078
Phone: (816)779-5212 Facsimile: (816)779-1004

To: Mayor & Board of Aldermen
From: Carl Brooks, City Engineer (cbrooks@cityofpeculiar.com)
Date: July 17, 2014
Re: Engineering Report on the Water Supply, Pumping, Storage and Distribution Facilities.

GENERAL INFORMATION

Applicant: City Staff
Requested Actions: Acceptance of an ordinance regarding the **"**Engineering Report on the Water Supply, Pumping, Storage and Distribution Facilities" and "Manual of Practice for Water Main Extensions" prepared by Larkin Lamp Rynearson and approved by the MDNR.
Property Location: City Wide
Purpose: Identify projects, supplement design specifications and construction details to the City's water system

PROPOSAL

City staff has been made aware the Board of Alderman would like to review all new or revised Public Works Guidelines or Specifications. Over the past year City staff has discovered changes that need to be made to keep abreast of new construction along with making the department operate more efficiently.

With that in mind we would like for the Alderman to review the enclosed information.

The Engineering Report covers:

- Compares the City's current water supply (Cass PWSD) #2 to other suppliers: Kansas City Water, Tri-County Water Authority and Water One, Chapter VI Alternative Water Supplies pages 90 -102
- Identifies a Capital Improvement Plan (CIP), Chapter IX Recommended Improvements pages 104 - 116
- Summarizes improvements in order of priority with costs estimates, Chapter X Opinions of Probable Cost pate 117
- Conclusion, Chapter XII pages 120 -121
- Hydraulic Analysis of the City's distribution system
- Submit a DNR 5-year Owner Supervised Program for future improvements
- Provide a Manual of Practice for Water Main Extensions, beginning with page 126 – 266 which will be used as a supplement to our current APWA design and construction specifications
- Received letter of approval dated July 1, 2014 from MDNR for the engineering report and 5-year Owner Supervised Program for future improvements.

PREVIOUS ACTIONS

Staff submitted and received a $28,000 engineering grant from the Department of Natural Recourses (DNR), Division of Environmental Quality, Public Drinking Branch, and Financial Assistance Center. Larkin Lamp Rynearson is the engineering firm completing the report.

KEY ISSUES

Upgrading of the City's water supply, system improvements and manual of practices; and supplementing our APWA design specifications and construction details standards.

STAFF COMMENTS AND SUGGESTIONS

City staff looks forward in implementing these documents as a plan for future water main improvements and additional information to supplement our APWA design specifications and construction details standards.

STAFF RECOMMENDATION

City staff recommends approval of the ordinance.

ATTACHMENTS

Copy of Engineering Report: Water Supply, Pumping, Storage and Distribution Facilities
Manual of Practice for Water Main Extensions
Ordinance

2014 Preliminary Engineering Report

on the

Water Supply, Pumping, Storage & Distribution Facilities

for the

City of Peculiar, Missouri

May 2014

Project No. 0313045

2014 Preliminary Engineering Report
Water Supply, Pumping, Storage & Distribution Facilities
for the
City of Peculiar, MO

TABLE OF CONTENTS

I General Information 1

II Introduction and Purpose 1

A. Goal 1

B. Scope 1

III. Existing System 4

A. Water Supply, Master Meters, and Distribution System 5

B. Pump Station 6

C. Storage Facilities 6

D. Population 7

IV. Hydraulic Model 8

A. General 8

B. Demand 9

C. Existing System 11

D. Existing System with Improvements 12

V. Applicable Design Standards 13

A. Missouri Safe Drinking Water Law 14

B. Missouri Safe Drinking Water Regulations 14

C. *Minimum Design Standards for Missouri Community Water Systems* 14

D. More Recent Developments in Regulatory Requirements 17

VI. Alternate Water Supplies 19

A. Kansas City, MO 20

B. Water District No. 1 of Johnson County, KS 22

C. Tri-County Water Authority 24

VII. Water Supply Comparison and Recommendations 25

A. Decision Matrix 26

B. Benefits and Deficiencies of Each Alternate 26

C. Weighted Decision Matrix for Each Option 28

D. Kansas City, MO Hydraulics 28

VIII. Historical Operating and Maintenance Costs 31

IX. Recommended Improvements 33

A. Storage Improvements 34

B. Distribution Improvements 34

C. Supply Improvement 44

D. Emergency Interconnect 45

E. Valves and Flushing Hydrants 45

F. Security 45

X. Opinions of Probable Cost 46

XI. Funding Options 46

XII. Conclusion 49

Tables

Table III.1 – Distribution System Summary 5

Table III.2 – Minimum Storage Volume 7

Table III.3 – Projected Population 8

Table IV.1 – Historical Water Demands 10

Table IV.2 – Projected Water Demands 11

Table IV.3 – Hydraulic Results without Improvements 11

Table IV.4 – Hydraulic Results with Improvements 12

Table VI.1 – Cost Opinion on Kansas City Supply 22

Table VI.2 – Cost Opinion on WaterOne Supply 23

Table VI.3 – Cost Opinion on TCWA Supply 25

Table VII.1 – Supplier Decision Matrix 26

Table VII.2 – Weighted Decision Matrix 28

Table VII.3 – Hydraulic Results without Improvements and KCMO Supply 29

Table VII.4 – Hydraulic Results with Improvements and KCMO Supply 30

Table VII.5 – Rate and Water Purchase Cost Opinions for future Water Suppliers 31

Table VIII.1 – Summary of Revenues and Expenses 31

Table VIII.2 – Current Water Rates 33

Table X.1 – Cost Opinion on Recommended Improvements 46

Table XI.1 – Current Rates and Required Rate Adjustments 48

Figures

Figure VII.1 – Elevated Storage Tank Hydraulic Grades 29

System Map ..... in Pocket

Appendices

Appendix A – Water Purchase Contract

Appendix B – Hydraulic Analysis Reports

Appendix C – Opinions of Probable Cost

Appendix D – SRF Intended Use Planning List Letter

I. General Information

The name and mailing address of the water system's Continuing Operating Authority is as follows:

City of Peculiar, MO
250 S. Main Street
Peculiar, MO 64078
Public Water Supply Identification Number: M01010633

II. Introduction and Purpose

The City of Peculiar (City) received an engineering report grant from the Missouri Department of Natural Resources (DNR), Division of Environmental Quality, Public Drinking Branch, Financial Assistance Center. This Preliminary Engineering Report on the potable water system and its supporting information consists of a hydraulic analysis, a Capital Improvement Plan (CIP), and a submittal to obtain a DNR 5-year Owner Supervised Program for future improvements studied within. The existing system was examined by review of existing system data, information from City personnel and use of computer hydraulic modeling technology. This report includes a summary of historical water use for the last 3 years, an estimate of future water needs and recommended water system improvements. The goal of this report is to solve present problems, increase reliability and prevent future problems before they occur. Recommendations for improvements are based not only on the computer results, but also on the engineer's experience with similar systems. The report is intended to serve as a planning tool for the City as it maintains the present facilities and prepares for future demands of the system.

The DNR *Minimum Design Standards for Missouri Community Water Systems* effective December 10, 2013 will be referenced in evaluating various components of the water system.

A. Goal

The City's goal is to identify improvements, which will correct any present or future deficiencies in the system. Simulation of any future deficiencies is based on the projected growth of the system. A prioritized list of recommended improvements is included as well as a recommendation on a long term source of supply.

B. Scope

The scope of services on this report is as follows:

1. Model existing system with existing demands to determine deficiencies. Model water line, storage, and/or pumping improvements to correct any identified deficiencies.
2. Evaluate current water supply and supply alternatives.

3. Project future demands for the City service area and model improvements necessary to meet these future demands.
4. Prepare a capital improvements plan (CIP) with cost opinion and priority assigned to each improvement.
5. Furnish 6 copies of the report to the City and Staff.
6. Submit report to the Missouri Department of Natural Resources for approval.

Hydraulic Analysis

1. Meet with the City to clarify project goals and expectations.
2. Gather field data and information on current operation of the water system including records of monthly water purchases/sales. Discuss operation with City staff.
3. Use information from the current system provided by City personnel and update the existing computer hydraulic model of the City's distribution system in WaterCAD software. Incorporate the water system CAD information recently prepared by City staff into the System Exhibit. Perform a hydraulic analysis of the system for existing and future flows.
4. Perform an overall system analysis to determine existing problem areas (high and low pressure areas, fire flow deficiencies, water age, dead ends, etc.).
5. Identify sections of the distribution system with frequent broken or leaking lines, which contribute to unaccountable water losses within the system.
6. Analyze the system, and make recommendations for: additional valves and flushing devices; improvements needed to maintain pressures above 35 psi; replacement of lines made of substandard materials; replacement of lines whose capacity has been or will soon be exceeded; looping dead-end lines; finished water storage capacity and condition.
7. Prepare list of proposed distribution system improvements.
8. Examine tank maintenance records and make recommendations of any sanitary or security improvements needed.
9. Discuss control system that operates the master meters, pump station and tank levels.
10. Examine the effect on the water system from potential growth related to:
    - The proposed interchange off of I-49 at 211th Street scheduled for 2015-16.
    - Current Land Use Plan with consideration of water system boundaries.

• Possible growth within already platted subdivisions served by the City.

Water Supply

1. Review the current water supply contract with PWSD No. 2 Cass County and the condition and capacity of the master meter connections.
2. Compare current supply to other available supplies such as from Kansas City Missouri (on Route J, south of Raymore), Tri-County Water Authority, or WaterOne Evaluation will include hydraulics, main sizing, probable connection cost and cost estimate update for a possible connection and transmission main.
3. Discuss availability of flow from any adjacent system via an emergency interconnection.
4. Discuss with City personnel any areas of concern with existing system and make recommendations for improvements, if needed.
5. Estimate the future cost of improving the current supply and compare to connection to an alternate supply. This will include the cost of water (1,000 gal.), cost of improvements, and effect on operation and maintenance. Assumptions will be made for rate changes on each supply source and historical information provided.
6. Estimate effect on water rates of any recommended water supply improvements.

Facility Plan Engineering Report Preparation

1. Meet or exceed the "Responsibilities of the Engineering Firm" as stated in the Three Party Payment Agreement for Engineering Report Services.
2. Summarize the evaluation of the existing supply, storage and distribution system for condition and ability to meet DNR requirements, water system demands, and other codes and regulations.
3. Summarize improvements in order of priority with estimated costs.
4. Based on assumed financing package, determining the water rate impact of the recommended improvements.
5. Discuss the City of Peculiar's current water rates, proposed rates after improvements, and the water rates of other similar area communities. Build on information in Larkin's recent rate study.
6. Estimate the impact of the proposed improvements on the yearly operation and maintenance budget.

7. List probable sources to finance the improvement with an explanation of the requirements of each funding program. Discuss status of City's listing on the DNR SRF Intended Use Plan Priority List.
8. Combine all of the engineering report items, with exhibits and appropriate documentation into a Facility Plan, for the improvements to be constructed, that meets the DNR State Revolving Fund Requirements.
9. Present the Facility Plan Engineering Report to the City Board and staff.
10. After addressing any comments from the City, submit the report to the DNR for review and approval.
11. Submit to DNR to obtain 5-Year Owner Supervised Plan Approval (Facility Plan, Peculiar standard specification and construction details for main improvements, & City inspector resume.
12. Provide copy of WaterCad hydraulic model data files to the City.
13. Be available for design of any recommended supply, transmission, distribution and/or storage improvements.
14. Provide engineering components for funding applications.

Water System Records System Documentation

1. Input City prepared information on water system consisting of waterlines, valves, and fire hydrants from (*jpeg format) into the existing hydraulic model on file (WaterCAD format). After completion of modeling, the WaterCAD file of the existing system will be converted into an ESRI ArcView (ArcGIS for desktop) software file. Attribute (valve and hydrant) reference numbers and additional information from the City prepared maps will be input into attribute tables for each valve and hydrant. This information can then be incorporated into the GIS system the City is beginning to develop.

III. Existing System

The City serves approximately 1,537 water meters. The service area is all within the present City limits, however, the City does not serve all residents within the City limits. Some areas that have been annexed are served by one of the surrounding water districts. Water is purchased from the Cass County P.W.S.D. No. 2, from its supply from Kansas City, MO. The City's existing water system consists of the following components: supply from three meter vaults, the distribution system, a booster pump station,

and two water storage tanks. Each of these components is discussed following. These components are shown on the Existing System Map at the back of this report.

A **Water Supply, Master Meters and Distribution System**

The City has been purchasing potable water from Cass County P.W.S.D. No. 2 (District) since March 1990. The City entered into a new agreement with the District on March 16th, 2010. The agreement is for a maximum of 0.70 million gallons per day and for a length of 25 years. A copy of the Water Purchase and Sales Contract can be found in Appendix A.

The City purchases water at three master meters located as follows:

- Master meter #1 is west of the intersection of 211th St and Harper St. (hydraulic grade of 1,175 feet)
- Master meter #2 is located at the northeast corner of the intersection of 211th St. and Peculiar Dr. (hydraulic grade provided by Master meter #1)
- Master meter #3 is located along Peculiar Drive, approximately 550 feet north of Siena Drive (hydraulic grade of 1,150 feet)

Each master meter maintains one of the four pressure zones within the City. Master meter #1 serves the City west of Interstate 49 except for Tuscany Estates, Sutter's Creek, and Spencer's Addition and the area south of Highway J, east of Interstate 49. Master meter #2 servers the area of the City north of Highway J, east of Interstate 49. Master meter #3 serves the housing subdivisions in the north area of the City along Peculiar Drive. Master Meters #2 and #3 are always open and provide pressure to Pressure Zone #2 and #3, respectively. Master Meter #1 is always open and provides water and pressure to Pressure Zone #1 and to the City's Ground Storage Tank. Water from the ground storage tank is pumped into the elevated storage tank, which provides pressure to Pressure Zone #4. All of the Pressure Zones can be seen on the enclosed map. The master meters are all in good working order.

The City's water system contains approximately 45 miles of waterline from 2-inch to 12-inch in diameter. The distribution system consists of PVC (polyvinyl-chloride), cast iron, and ductile iron waterlines. Table III.1 summarizes the pipe lengths.

Table III.1: Distribution System Summary

Pipe Diameter(in.)	2	3	4	6	8	10	12	Total
Total length, (ft)	14,590	2,278	57,843	26,649	111,095	7,388	20,132	239,975
% of total system	6.1%	1.0%	24.1%	11.1%	46.3%	3.1%	8.3%	100.0%

Pipes within several areas of the distribution system are reported by operating personnel to experience

frequent main breaks which result in a large source of the City's unaccounted for water. These areas include:

- Peculiar Drive/Main St. between Hurly St. and E. North St.
- Along Harr-Grove Rd.
- Along Elm St.
- E. Broadway St between E. 3rd St. and N. Main St.
- Gregory between Elm St. and Kayla Dr.

B. Pump Station

The City has one pump station located adjacent to the ground storage tank at the south end of W. 3rd Street. The pump station contains two 40 HP pumps which fill the elevated storage tank on-site from the ground storage tank. The SCADA system controls the operation of the pumps based upon levels in the elevated storage tank. The pumps were replaced in a 2006 project and rebuilt with a major overhaul in 2012.

C. Storage Facilities

The City has a 428,000 gallon welded steel ground storage tank which is 24' high and 55' in diameter and was constructed in 1982. The only high level storage is a 400,000 gallon multi-column welded steel elevated storage tank which was constructed in 2006. Both tanks are located at the south end of W. 3rd Street. The City operates both tanks in the upper three feet or so with control points of 1,136.0 and 1,139.0 mean sea level (msl) for the elevated storage tank and 1,010 and 1,013.5 for the ground storage tank.

Missouri Department of Natural Resources recommends minimum storage volume in a distribution system that provides fire protection to be calculated as follows:

Average Day + Equalizing Storage + Fire Flow Reserve

Equalizing Storage to meet diurnal daily peak demands = 0.5 x Average Day

Fire Flow Reserve = 1,000 gpm x 2 hrs = 120,000 gallons

Alternatively, the minimum storage should be equal to the maximum daily flow + Fire Flow Reserve:

Maximum Day + Fire Flow Reserve

The current and future required storage based on these assumptions and the predicted demands calculated in Section IV are shown in Table III.2. The City's maximum day demand based on peak month usage and similar systems is assumed to be approximately equal to 1.5 times average day usage. This results in the two minimum storage requirements Table III.2 to be equal.

Table III.2: Minimum Storage Volume		
Year	**Volume Based On Average Day + Equalizing Storage + Fire Flow Reserve (gallons)**	**Volume Based On Maximum Day + Fire Flow Reserve (gallons)**
2013	505,500	505,000
2018	547,448	547,448
2033	696,864	696,864

With both tanks in service, the City has 828,000 gallons of finished water storage; which is enough to meet the DNR criteria. The only caveat is that the booster pump station is not backed up by an emergency or secondary power source. The DNR's Minimum Design Standards state that system serving a population of 3,300 or more shall make arrangements for back-up power in either the form of a secondary independent utility source or auxiliary generator.

A supplement to system storage volume during an emergency can be contracted for through the elevated storage from a wholesale water provider. P.W.S.D. No. 2 Cass County has a 500,000 gallon elevated tank located on 203rd Street, just west of Peculiar Drive.

The Missouri Department of Natural Resources has guidelines for the inspection of water storage facilities that requires periodic inspection of both a tank's sanitary features, as well as condition of the structure. Annual inspections are required to ascertain that screens are in place covering the vent and overflow pipes to prevent contamination from intrusion by pests. On every third year, the tank is to be washed out and the condition of the coating and accessories assessed. The City has a contract for the ground storage tank to be emptied and rehabilitated with a new coating system and sanitary features beginning in late April 2014 and completion set for June 2014.

D. Population

The City has experienced substantial population increases over the past two decades. The City population has grown at an average of 4.21% each year. If this population growth factor is utilized, the City's population would be greater than 10,000 by the year 2033, as seen in the Table III.3. Table III.3 shows past Census population and predicts future City population at a 4.21% annual increase.

Table III.3: Projected Population

Year	Population	Annual % Change	Population Change
1980	1571		
1990	1777	1.24%	206
2000	2604	3.90%	827
2010	4054	4.53%	1450
2011	4225	4.21%	171
2012	4403	4.21%	178
2013	4588	4.21%	185
2014	4781	4.21%	193
2015	4982	4.21%	201
2016	5192	4.21%	210
2017	5411	4.21%	219
2018	5638	4.21%	228
2019	5876	4.21%	237
2020	6123	4.21%	247
2021	6381	4.21%	258
2022	6650	4.21%	269
2023	6930	4.21%	280
2024	7221	4.21%	292
2025	7525	4.21%	304
2026	7842	4.21%	317
2027	8172	4.21%	330
2028	8516	4.21%	344
2029	8875	4.21%	359
2030	9248	4.21%	374
2031	9638	4.21%	389
2032	10044	4.21%	406
2033	10466	4.21%	423

IV. Hydraulic Model

A. General

A hydraulic model of the City's water distribution system was created using Bentley's, WaterCAD software program. WaterCAD links hydraulic modeling capability with a scaled map of the system, drawn in AutoCAD. Input variables to the program include pipe length, pipe diameter, pipe friction factor (C), pipe connectivity, location of storage tanks, overflow elevations of storage tanks, pump curves, customer locations, and customer demands. Pipe friction factors of 120 to 150 were used throughout the distribution system for existing waterlines. New pipes are analyzed at a C factor of 150.

Customer demands were based on the data presented in Section IV-B. Information regarding current operation of the system, including current water sales records, pump flows, storage operating range and recent piping improvements has been gathered and incorporated into the hydraulic model.

The DNR's *Minimum Design Standards for Missouri Community Water Systems* states that systems shall be designed to maintain at least 35 pounds per square inch (psi) normal working pressure at ground level at all points in the distribution system under all conditions of design flow, not including fire flow. The DNR will consider approving design of a lower working pressure on a case by case basis:

- Transmission mains that have no current or anticipated retail or commercial services;
- Dedicated pump supply lines from storage in a treatment plant yard piping;
- Supply from a ground storage tank or reservoir provided no services are on the supply until it reaches 35 psi or greater;
- On unplanned and emergency connections or consolidation projects where providing 35 psi to the new area would require major revisions to present infrastructure. No more than 5% of service connections representing the entire service area (current plus proposed) may be designed under 35 psi and none under 25 psi; and
- The DNR suggests that distribution systems should be designed to provide approximately 60 to 80 psi.

Water pressures in distribution systems below 20 psi are a violation of Missouri Safe Drinking Water Regulation and are considered by the DNR to be an imminent hazard to public health. For this report, a minimum of 35 psi was utilized to size improvements.

B. Demand

The City has experience a minor amount of growth in water usage over the past four years. Historical water demands for these last four fiscal years are shown in Table IV.1. Finished water purchased from the District between October 2012 and September 2013 was approximately 94.89 million gallons (MG) and water sales were approximately 80.1 MG (with 80,000 gallons of the water not sold accounted for). This calculates to 15% Total Water Not Sold in that year. A portion of the Total Water Not Sold is internal water used by the City for flushing and filling new lines. Maintaining monthly records of estimated water lost to flushing, filling, etc. is recommended. The City has implemented a record keeping program. Since October 2013, the City's average monthly water loss has decreased every month and averages 5.45 a month water loss.

The primary objective of a water system is to furnish an adequate supply of safe, treated water to meet the demands of its customers. To properly meet this need, water demands must be accurately projected so that adequate facilities can be planned, designed, financed, and constructed prior to their actual need.

Water usage varies with the time of the day and the seasons of the year. Three terms are used to define usage demands: average day, maximum day, and peak hour:

Average daily flow (ADF) use is the yearly total quantity of water distributed, divided by the number of days in the year. The ADF, calculated from existing City water use data, is 0.11 gallons per minute per meter (gpm/meter). When flow records are not available, the ADF is used with assumed peaking factors to estimate maximum daily flow and peak hour projections.

Maximum daily flow (MDF) use is the maximum quantity of water distributed in any 24-hour period during the year. Typically this occurs during hot summer months when water use is the greatest due to high temperatures, operation of swimming pools, and watering of livestock and lawn/gardens. In the absence of daily master meter readings, the MDF to ADF ratio is assumed to be 1.5 for a municipal system like Peculiar. The calculated MDF from ADF records is then 0.17 gallons per minute per meter (gpm/meter). This ratio was utilized in this model to estimate future maximum daily flows.

Peak Hourly Flow (PHF) use is the maximum quantity of water distributed during any 60-minute period of the year. This condition generally occurs in the morning when many customers are simultaneously consuming water for showering, or in the evening when many customers are returning home from work and simultaneously consuming water for meal preparation and other activities. A typical peak hour to maximum day factor of 2.0 was used in the hydraulic calculations resulting in a peak hourly demand rate of 0.34 gpm/meter.

Table IV.1. – Historical Water Demands

Year	2010	2011	2012	2013	Average
Customers	1,509	1,525	1,540	1,537	1,528
Annual Percent Change - (%)		1.06%	0.98%	-0.19%	0.62%
Annual Water Purchased (gal)	87,230,287	94,070,020	99,276,682	94,465,030	93,760,505
Annual Percent Change – (%)		7.84%	5.53%	-4.85%	2.84%
Annual Water Sales (gal.)	74,145,744	79,959,517	84,385,180	80,295,276	79,696,429
Annual Percent Change – (%)		7.84%	5.53%	-4.85%	2.84%
Total Water Not Sold – (gal)	13,084,543	14,110,503	14,891,502	14,169,755	14,064,076
Total Water Not Sold – (%)*	15%	15%	15%	15%	0.15
Avg. Consumption (gpm/meter)	0.11	0.12	0.12	0.11	0.11
Avg. Day Purchases (gal./day)	238,987	257,726	271,991	258,808	256,878

**Estimated water loss for 2010 through 2012*

The average growth rate has been 2.84% over the past 2 years. For this report a conservative growth factor of 2.0% was utilized to predict future demands. This allows for a 1% growth in residential water demands and a 1% growth for anticipated industrial and commercial growth. Industrial and commercial growth is most likely to occur near the proposed interchange at 211th and I-49. This area has

significant electrical service capacity available and the Missouri Department of Transportation and the City are investing in the construction of an interchange.

Water purchases and sales within the City service area will increase with population growth. Table IV.2: Projected Water Demands uses a 4.21% growth rate and a Max day/Average day ratio of 1.5.

Table IV.2 –Projected Water Demands			
Year	2018	2028	2033
Annual Finished Water Purchased (gal.)	116,096,211	175,352,517	215,505,811
Annual Water Sales (gal.)	98,681,779	149,049,640	183,179,939
Average Day Water Purchased (gal.)	317,203	479,105	590,427
Maximum Day Water Purchased (gal).	475,804	718,658	885,640

The City's current demands, plus reasonable growth, are reflected in the 2033 Maximum Day Water Purchase projection of 885,640 gallons. At this growth rate the City would have a maximum day water purchased of over one million gallons by the year 2036.

C. Existing System

Several cases were developed using the existing system to determine the location of, and priority for, needed improvements. The existing system was analyzed at average day, max day, and peak hour. The outlet pressures at all three master meters were set to the gradients discussed in III.A. These conditions were analyzed for the years 2013, 2018, and 2033. Locations of additional demands were based upon existing platted areas and the growth predicted to occur at the proposed 211th and I-49 interchange. The following table shows the average, high and low pressures of these scenarios when ran at steady state with the elevated storage tank 10' below overflow (note this is lower than the City currently operates the tank but was utilized to find any deficiencies). Table IV.3 does not include low pressure readings that occur between the ground storage tank and the suction side of the pump station. (See Appendix B for full results).

Table IV.3 – Hydraulic Results Existing System without Improvements			
Scenario	Low Pressure (psi)	Average Pressure (psi)	High Pressure (psi)
Year 2013			
• ADF	28.9	61.1	118.6
• MDF	27.8	60.7	118.1
• PHF	24.5	59.3	115.8
Year 2018			
• ADF	28.4	60.9	118.6
• MDF	27.0	60.4	118.1
• PHF	22.9	58.8	115.8
Year 2033			
• ADF	27.8	60.7	118.2
• MDF	26.1	60.0	117.4
• PHF	21.2	57.9	113.4

Results of the hydraulic analysis of the existing system show a minimum pressure in the system of approximately 29 psi under 2013 ADF demands at Junction 708 near the intersection of 222nd St. and Setter's Pointe Blvd (this is lower than the desired 35 psi). The highest pressure in the system under the same scenario is approximately 119 psi on Highway J at a stream crossing north of Cemetery Road at Junction 898. Under 2013 ADF, approximately 60 junctions had pressure less than 35 psi. Most of these were located in Pressure Zone 1, east of S. Peculiar Dr. between Tuscany Pkwy and Lions Dr. This area is fed directly from PWSD No. 2 Cass and does not receive pressure from the City's elevated storage tank. As demands increase within the system, the hydraulic analysis indicated additional junction pressures will drop below the DNR's Minimum Design Standards recommendations. Most of these junctions continued to fall within Pressure Zone 1, but with additional other junctions spread throughout Pressure Zone 2.

D. Existing System with Improvements

Section IX lists the recommended improvements utilized to enhance the City's distribution system. These improvements first focused on replacing mains that have deficient pipe as evidenced by many main breaks. Also larger diameter waterlines are recommended to improve deficient pressures in Pressure Zone 1 and other improvements will eliminate dead-end lines with looping. Table IV.4 contains the results of the hydraulic analysis with all improvements constructed (this table has the same limitations as Table IV.3).

Table IV.4 – Hydraulic Results with Recommended Improvements

Scenario	Low Pressure (psi)	Average Pressure (psi)	High Pressure (psi)
Year 2013			
• ADF	42.1	66.0	118.7
• MDF	41.5	65.8	118.3
• PHF	39.6	64.8	116.6
Year 2018			
• ADF	41.8	65.9	118.6
• MDF	41.1	65.6	118.3
• PHF	38.8	64.5	116.6
Year 2033			
• ADF	41.5	65.8	118.4
• MDF	40.6	65.3	117.8
• PHF	37.7	63.9	114.9

With the improvements in place, junctions in all 9 scenarios now meet the 35 psi goal of the Study. (See Appendix B for full results). Distribution improvements are prioritized in Section IX based on the findings of these analyses and discussions with City personnel.

A steady state fire flow analysis was also performed on the distribution system. Within the existing system, approximately 46% of the junctions were able to meet a fire flow demand of 1,000 gpm while maintaining a system minimum pressure of 20 psi at 2033 demands. With the recommended system improvements, this number climbed to 74%. The areas not meeting the fire flow requirements are on waterlines less than 8-inches in diameter. As expansion occurs in these areas, the City should evaluate the opportunity to work with development to have larger diameter waterlines installed.

V. Applicable Design Standards

The DNR is authorized to monitor and enforce regulations pertaining to the production and distribution of potable water. The DNR establishes standards and guidelines to be followed in the design, construction, and operation of public water supply (PWS) facilities. Facilities must meet the requirements of the Missouri Safe Drinking Law and the Missouri Safe Drinking Water Regulations. Pertinent excerpts of the following documents are presented in this section:

Missouri Safe Drinking Water Law

(Sections 640.100 through 640.140, Revised Statutes of Missouri)

Missouri Safe Drinking Water Regulations

(10 CSR 60-1.010 through 10 CSR 60-16.030)

Excerpts from *Minimum Design Standards for Missouri Community Water Systems* effective December 10, 2013.

Disinfectants and Disinfection By-Products Rule (D/DBPR) Stage 1 and 2

Safe Drinking Water Act Reauthorization (SDWA)

Surface Water Treatment Rule (SWTR)

Interim Enhanced Surface Water Treatment Rule (IESWTR)

Long-Term Enhanced Surface Water Treatment Rule (LT2 Rule))

Lead and Copper Rule

Total Coliform Rule

Occupational Safety and Health Administration Rules

The City currently purchases water indirectly from the city of Kansas City, which utilizes a combination of groundwater and surface water as a source. Surface water treatment regulations apply to this source. Kansas City uses chloramines as the residual disinfectant. The City is considered a “consecutive system” since the City purchases water from PWSD No. 2 Cass County, which purchases water from Kansas City. Regulations that apply to Kansas City, as a large system (serving greater than 100,000 population) also apply to Peculiar due to the consecutive system classification.

A. Missouri Safe Drinking Water Law

Key points of the law are presented as follows:

Statute 640.115.1--Every water system authorized to supply drinking water to the public shall file with the DNR a certified copy of the plans and surveys of the waterworks with a description of the methods of purification and of the source from which the supply of water is derived, and no source of supply shall be used without a written permit of approval from the DNR, or water dispensed to the public without first obtaining such written permit or approval.

Statute 640.115.2--Construction, extension, or alteration of a public water system shall be in accordance with the rules and regulations of the DNR.

Statute 640.120.4--The DNR may authorize variances and exemptions from state primary water regulations.

B. Missouri Safe Drinking Water Regulations

A review of state safe drinking water regulations applicable to surface water is presented as follows.

10 CSR 60-4.055 (1)(E) Disinfection Requirements:

Primary systems which use water obtained from groundwater not under the direct influence of surface water and which the department requires to disinfect and secondary public water systems do not have to meet the requirements of section (2) (CT requirements) of this rule but may be required to provide disinfection detention as deemed necessary by the department. These systems also do not have to submit reports to the department as required by 10 CSR 60-7.010(5) but must maintain the information on file at the system treatment plant or office.

10 CSR 60-7.010(5) Disinfection information must be reported within ten (10) days after the end of each month the system serves water to the public.

C. Minimum Design Standards for Missouri Community Water Systems

The DNR has prepared a set of minimum standards and guidelines for use by professional engineers in the preparation, submission, review and approval of engineering reports, plans and specifications for the design and construction of public water supply facilities. These minimum standards must be followed in order to ensure that facilities are in compliance with the Missouri Safe Drinking Water Law and Missouri Safe Drinking Water Regulations.

DNR standards and guidelines are not totally inflexible. From time to time new processes and equipment appear. The DNR states that new processes and equipment may be acceptable if they meet at least one of the following conditions: 1) they have been thoroughly tested in full scale comparable installations under competent supervision, 2) they have been thoroughly tested as pilot plant operated for a sufficient time to indicate satisfactory performance, or 3) a performance bond or other acceptable

arrangements have been made so the owners or official custodians are adequately protected financially in case of failure of the process or equipment.

An excerpt of pertinent guidelines follow:

(1) SUBMISSION OF PLANS

(1.1) Engineering Report

1.1.2. Extent of the water system(s), including--

(I) Usage rates and population per service connection based on historical data from the public water system if this data is available. If historical data is not available, the following information may be used for design purposes. Other usage criteria may also be used if adequate justification is provided by the engineer.

(a) Population per service connection for permanent residential dwelling units including houses, mobile homes, condominiums, apartments, and multiplexes should use approximately three (3.0) persons/dwelling unit;

(b) Domestic water usage for residential dwelling units excluding lawn/garden irrigation usage should be an average of eighty (80) gallons per person per calendar day.

(II) In addition to peak demand, a reasonable coordination of lawn water among homeowners may be assumed. If no other information is available the estimates in the following table may be used:

Housing Type	Sprinkler Type	Flow per House
Moderate/Middle Class	End of Hose	5 gpm
Estate	Automatic	16 gpm

(III) Peak flow (one to four hour instantaneous rates) shall be based on historical data as documented by the public water supply. If historical data is not available, the following information may be used for design purposes. Other peak flow criteria may also be used if adequate justification is provided by the engineer.

(a) Instantaneous Peak Flow = Domestic Peak Flow + Lawn/garden Irrigation Peak Flow + Commercial, Larger Users, Confined Feeding Operation;

(b) Domestic peak flow should be calculated as the greater of one (1) gallon per minute per connection or Peak = 12 (number of connections) to the 0.515 power.

(IV) Maximum day flow shall be based on historical data if this data is available from the public water system. If historical data is not available, the following information may be used for design purposes. Other maximum day flow criteria may be used if adequate justification is given by the engineer.

Maximum Day Flow = 150% of Average Daily Flow

(1.2) Supervised Program

C. Detailed Plans

(I) Owner-Supervised Program

(a) A supplier of water may apply for an owner-supervised program in lieu of submitting plans and specifications for expansion and/or modification of an existing water distribution system.

(b) A written request to the Department of Natural Resources for approval of a supervised program must include the following information:

1. An engineer-prepared report or a master plan showing the proposed waterlines over at least the next five (5) years, along with engineering rationale, including hydraulic analyses, for sizing and locating the lines. The engineering report must discuss adequacy of present water system with regard to the source, storage and existing distribution piping, discuss problems that need to be resolved (leaks, low pressures, etc), discuss fire protection need (if applicable). A priority listing of proposed improvements along with cost estimates should also be included in the engineering report;
2. A current layout map of the distribution system (standard size 24" x 36"). The map must show waterline sizes (existing and proposed), location of valves, fire hydrants and flushing devices, along with street names;
3. Adoption of a minimum pipe size for waterline replacements not otherwise shown on the master plan which will maintain a minimum pressure of twenty pounds per square inch (20 psi) under all normal operating conditions;
4. Examples of permanent records and drawings of the distribution system including lines, valve, hydrants and cleanouts;

5. Technical specifications prepared by an engineer covering construction materials, installation, and disinfection procedures in accordance with American Water Works Association standards;
6. Typical detail drawings by an engineer of special crossings, meter settings, valve settings, hydrant settings, cleanouts, thrust blockings, etc.; and
7. A brief statement about qualifications of the person responsible for construction inspection.

(8.1.1) Pressure

All water mains shall be sized in accordance with a hydraulic analysis based on flow demands and pressure requirements. The system shall be designed to maintain a minimum pressure of 35 psi at ground level at all points in the distribution system under all conditions of design flow not including fire flow. The normal working pressure in the distribution system should be approximately 60 psi.

D. More Recent Developments in Regulatory Requirements

Many changes have been introduced into the regulations governing water treatment in the last ten years and some of these are in various stages of effect at this time. The most notable items of regulation that will affect the City are as follows:

Stage 2 - Disinfection Byproducts Rule (DBPR2)

Stage 2 of the DBPR, published in January 2006 and effective March 6, 2006, further expands the scope of Stage 1 by using a locational running annual average (LRAA) to ensure total trihalomethane (TTHM) and the sum of five haloacetic acids (HAA5) compliance and requiring Initial Distribution System Evaluations (IDSE) to be performed. All community water systems adding a disinfectant other than ultraviolet light are covered by the DBPR2. Suppliers will have to perform an additional year of TTHM and HAA5 monitoring, in addition to Stage 1 requirements, as the first step in meeting the IDSE requirement of the Rule. This information, along with data from Stage 1 DBPR monitoring, was used to select new locations for Stage 2 monitoring.

To be in compliance with Stage 2 monitoring requirements, the City had to take two samples for TTHMs and HAA5s every 90 days at four locations within the distribution system. Since the City serves less than 10,000 people, the IDSE Schedule 4 applies. This means that a standard monitoring plan had to be submitted by April 1, 2008. This plan included standard monitoring which was to be finished by March 31, 2010. The City had until July 1, 2010 to submit an Initial Distribution System Evaluation

(IDSE) report for the water system. By the final deadline of October 1, 2013, the City needed to demonstrate compliance on a LRAA for TTHM and HAA5 MCLs at each location for compliance with Stage 2 DBPR monitoring.

Surface Water Treatment Rule (SWTR) - Effective on June 29, 1993. The major purpose of the rule is to control waterborne pathogens, particularly Giardia lamblia cysts and viruses that could enter public water distribution systems. Three categories of source waters were defined: surface water, ground water, and ground water under the direct influence of surface water. The rule requires additional monitoring and minimum treatment plant performance on surface supplies and supplies classified as ground water under the direct influence of surface water. Prescribed treatment techniques are used in place of testing due to the uncertain methods currently available for Giardia and Cryptosporidium identification. Summary of new requirements include:

- 0.5 NTU turbidity maximum in 95% of the required samples to be taken every 4 hours of plant run time minimum.
- Requires 99.9% (3-log) removal of Giardia and 99.99% (4-log) removal of viruses.
- Requires continuous and recording chlorine residual monitoring.

Long-Term Enhanced Surface Water Treatment Rule (LT2 Rule)) –

The LT2 Rule was published January 5, 2006 and requires public water systems that use surface water or GWUDI of surface water to monitor their water treatment influent water (source water) for *Cryptosporidum*, and/or *E. Coli*, and turbidity for the length of time based on the population served by the plant. With the current population served by the water treatment plant, the City will have to comply with Schedule 4 of the LT2 Rule Monitoring Requirements. This means the City must begin monthly monitoring for a year on October 1, 2008. This monitoring can be avoided if the water treatment plant provides 5.5 log treatment of *Cryptosporidum*.

The EPA recommends contacting labs to perform sample analysis of *Cryptosporidum*, and *E. Coli*, as well as verifying that the party in charge of turbidity measurement is approved by the State by June 2006. A sampling schedule (or intent to provide full treatment), description of sampling location, and monitoring description is required to be submitted to the EPA by January 1, 2008 (July 1, 2006). The sampling schedule and initial monitoring data can only be sent to the EPA through the LT2/Stage 2 Data Collection and Tracking System.

Lead and Copper Rule—The 1986 Safe Drinking Water Act amendments directed EPA to set regulations for both lead and copper in drinking water. The final regulations were adopted by EPA in

1991, and later adopted by reference in the CSR. This regulation applies to all community water systems, and non-community water systems that are non-transient. These water systems are required to monitor for lead and copper on a scheduled basis in the distribution system at the customer's tap. If monitoring results indicate unacceptable levels, the water system is required to initiate corrosion control treatment techniques to minimize lead and copper contamination. Action levels set by this regulation are 0.015 mg/L for lead and 1.3 mg/L for copper. The City has historically tested below the action level for both lead and copper.

Total Coliform Rule—All public water supply systems are required by state regulation 10 CSR 60-4 to disinfect all drinking water provided to the public. To evaluate the effectiveness of the disinfection method employed, all systems are required by state regulations to submit monthly water samples for total coliform testing. Total coliform testing is used as an indicator of the presence of other bacteriological contaminants. Systems can choose to have this bacteriological testing performed by DNR's microbiology laboratory or by a private certified laboratory.

Systems that fail to collect any water samples within the monthly compliance period are assessed a routine monitoring violation. Systems that have a water sample test positive are required to do three repeat samples (also called check samples). If the system fails to collect these repeat (check) samples, the system then is assessed a repeat monitoring violation. Both of these monitoring violations require the system to issue public notice by publishing the violation notice in a local newspaper of general circulation.

Systems can incur a maximum contaminant level (MCL) violation if water samples test positive for total coliform, or the system can incur an acute maximum contaminant level (acute MCL) violation if fecal coliform or *E. coli* is found. In either case, the system is required to issue public notice by notifying the public of the violation through the electronic news media (radio and television) and publishing the violation notice in a local newspaper of general circulation.

Occupational Safety and Health Administration Rules (OSHA) – Of particular interest to utility systems are the January 14, 1993 rules that pertain to Confined Spaces. 29 CFR Parts 1910 Permit Required Confined Spaces for General Industry contains requirements for practices and procedures to protect employees from the hazards of entry into permit-required confined spaces.

VI. ALTERNATE WATER SUPPLIES

The City presently purchases water from Cass County P.W.S.D. No. 2, which purchases water from Kansas City. The City has emergency interconnections with PWSD No's 10 and 7 of Cass County.

This report will examine the feasibility of purchasing water directly from a water producer in order to reduce the City's cost of water. This would avoid the wheeling fees (additional charges for utilizing an intermediate's facilities to transport water on top of the cost of water) required by purchasing water through a secondary source. The City has narrowed a list of potential water sources to Kansas City, Water District No. 1 of Johnson County, Kansas, and the Tri-County Water Authority. If the City decides to pursue a new water provider, the contract with District No. 2 requires a 1-year notice that water purchase will cease.

A. Kansas City, MO

Kansas City is the producer of the City's current source. Kansas City Water Services maintains and operates water supply, treatment, and distribution systems for 170,000 residential and business customers in Kansas City and 33 wholesale customers in the Kansas City region. Kansas City has 2,800 miles of water main in its system. Each year the City has a cost of service rate study completed that establishes the new wholesale rate to become effective on May 1st. The costs of administration, larger water mains, pumping facilities, storage facilities, supply and treatment works are shared with wholesale customers.

In April 2014 voters in Kansas City voted to approve $500 million dollars of revenue bond authority in order to pay for water capital improvement projects for the next 7-10 years. Kansas City has a goal to replace approximate 1% of its water mains, or 28 miles, every year under this plan. At this time most of the planned replacement mains are 12" in size or smaller in neighborhoods.

This is the initial source for the City's current potable water supply. Kansas City has a supply capacity of 240 million gallons per day (MGD) and produces an average of 112 MGD. Eighty percent of its raw water comes from the Missouri River with the other 20% produced from alluvial wells near the river intake. Kansas City utilizes the following treatment processes:

- Iron removal through permanganate addition and sequestration
- Rapid Mixing
- Softening via lime and soda ash addition
- Disinfection utilizing gaseous chlorine
- Chloramines for disinfection by-product control
- Filtration
- Odor and taste control via powdered activated carbon
- Fluoridation
- Particulate removal through coagulation, sedimentation, and flocculation

Kansas City has two wholesale water rates: unrestricted and restricted. The restricted rate is

approximately 5 cents per 1,000 gallons lower than the unrestricted rate. Qualification for the two rates depends upon the wholesale customers' current storage facilities volume and whether or not the supply is a sole supply or a partial supply. The City of Peculiar, if purchasing a sole supply, has enough storage capacity to qualify for the restricted rate. The restricted rate is $2.73 per 1,000 gallons effective May1, 2014. Kansas City also charges repumping fees depending on where the delivery point is within the KC system. The repump charges effective May 1, 2014 are $0.25 and $0.35 per 1,000 gallons for the first and second repump, respectively. Kansas City has a 24-inch diameter transmission main that extends south of the intersection of Highway J and Hubach Hill Road to the Raymore elevated storage tank. According to information from Kelly Finn with Kansas City Water Services, the Raymore tank operates at a minimum hydraulic grade of 1226 feet. When Raymore constructed the elevated tank, Kansas City also reserved capacity in the Raymore elevated tank for future wholesale customers.

To reach a connection point adjacent to the Raymore elevated tank would require approximately 5 miles of main be installed north of the City along Route J. On the south end of the new service transmission main the City system can be connected at two locations, at a point on Highway J, just east of I-49 to an existing waterline at Branic Road. The second connection point would connect to a proposed main that will be relocated in preparation for the new 211th Street interchange.

Table VI.1 has a cost opinion for this water supply option. This opinion also includes a capacity charge of approximately $820,000 for 1.0 MGD of capacity from Kansas City. This is based on the original construction cost of the transmission main and Kansas City's share of the Raymore elevated tank.

Table VI.1: Cost Opinion on Kansas City Supply

Item No.	Description	Quantity	Units	Unit Price	Cost
1	12" PVC	26,200	LF	$55	$1,441,000
2	Connections	4	EA	$5,000	$20,000
3	Valves	14	EA	$3,000	$42,000
4	Road Crossings	14	EA	$10,000	$140,000
5	Master Meter	1	EA	$75,000	$75,000
6	Air Release Valves	3	EA	$2,000	$6,000
7	Highway J Crossing	1	EA	$20,000	$20,000
8	Driveway Crossing	26	EA	$2,000	$52,000
9	Parking Lot Crossing	1	LS	$10,000	$10,000
10	Stream Crossing	190	FT	$500	$95,000
	(Directional Bore and Case)				
11	Flushing Hydrant	5	EA	$3,750	$18,750
12	SCADA Modifications	1	LS	$5,000	$5,000
13	Bond/Insurance/Mobilization	1	LS	$60,000	$60,000
14	Connection Fee	1	LS	$820,000	$820,000
		Construction Cost			$2,804,750
		Contingency		15%	$420,713
		Engineering, Legal, & Admin.		10%	$280,475.
		Construction Observation		4.5%	$126,214
		Survey		5.0%	$140,238
		Total			$3,772,389

If the City chooses to pursue a direct water supply from Kansas City, we recommend having an alternate bid for a 16-inch transmission main.

B. Water District No. 1 of Johnson County, KS

Water District No 1 of Johnson County Kansas (WaterOne) is located in eastern Johnson County. WaterOne has a supply capacity of 200 million gallons per day (MGD) and produces an average of 68 MGD. WaterOne utilizes water from the Kansas and Missouri rivers as well as alluvial wells adjacent to these rivers. WaterOne utilizes the following treatment processes:

- Aeration
- Rapid Mixing
- Softening via lime and soda ash addition
- Disinfection utilizing chlorine dioxide
- Chloramines for disinfection by-product control

- Filtration
- Fluoridation
- Alum and polymer addition
- Carbon Dioxide for pH balance
- Particulate removal through coagulation, sedimentation, and flocculation

In preliminary discussions between WaterOne and the City, a monthly service charge of $139.30 and a rate of $3.07 rate per 1,000 gallons were discussed. The City would need to get a guarantee from WaterOne of service arability equal to WaterOne's existing customers. The City would need to install a waterline (approximately 11 miles) from the northwest portion of the City, north and west to near the intersection of 175th St. and Kenneth Rd. in Johnson County. Table VI.2 has a cost opinion for this option.

Table VI.2: Cost Opinion on WaterOne Supply

Item No.	Description	Quantity	Units	Unit Price	Cost
1	12" PVC	58,000	LF	$55	$3,190,000
2	Connections	2	EA	$5,000	$10,000
3	Valves	24	EA	$3,000	$72,000
4	Road Crossings	15	EA	$10,000	$150,000
5	Pump Station	2	EA	$200,000	$400,000
6	Master Meter	1	EA	$75,000	$75,000
7	Air Release Valves	6	EA	$2,000	$12,000
8	Highway Y Crossing	1	EA	$25,000	$25,000
9	Highway D Crossing	1	EA	$25,000	$25,000
10	Stream Crossing	100	FT	$500	$50,000
11	Stream Crossing	100	FT	$500	$50,000
12	Stream Crossing	90	FT	$500	$45,000
13	Ditch Crossing	2	EA	$5,000	$10,000
14	Railroad Crossing	1	LS	$50,000	$50,000
15	Driveway Crossing	62	EA	$2,000	$124,000
16	Flushing Hydrant	15	EA	$3,750	$56,250
17	SCADA Modifications	1	LS	$25,000	$25,000
18	Bond/Insurance/Mobilization	1	LS	$130,000	$130,000
		Construction Cost			$4,499,250
		Contingency		15%	$674,888
		Engineering, Legal, & Admin.		10%	$449,925
		Construction Observation		4.5%	$202,466
		Survey		5.0%	$224,963
		Total			$6,051,491

C. Tri-County Water Authority

Tri-County Water Authority (TCWA) has a supply capacity of 10.5 MGD and produces an average of 4.4 MGD. TCWA uses ground water from alluvial wells located south of the Missouri River, outside of Atherton, Missouri. Originally all the wells were vertical wells, but now a significant portion of the supply comes from a horizontal collector well. This well is closer to the Missouri River bank and is likely classified as groundwater under the direct influence of surface water (GWUDI). TCWA utilizes the following treatment processes:

- Iron removal through aeration
- Rapid Mixing
- Softening via lime and soda ash addition
- Disinfection utilizing gaseous chlorine
- Chloramines for disinfection by-product control
- Filtration
- Particulate removal through coagulation and sedimentation

All existing capacity south of Colbern Road is under contract with current members. In 2010, TCWA began investigating serving entities west of their current service area. Interested potential customers at that time included PWSD No. 1 Jackson County (Grandview) and the City of Belton. This project has not moved forward at this time. The City could come to an agreement with an existing entity to purchase a portion of their water. TCWA has two water rate structues. The first is for all of the TCWA's capacity prior to 2005 and it charges $1.87 per 1,000 gallons for water costs and $2.43 per 1,000 gallons for fixed costs. For capacity created after 2005, the water costs are the same; however, the fixed costs fluctuate. An entity is required to pay a percentage of any debt service needed to fund the capacity construction equal to the percentage of that capacity purchased. This fixed cost will be divided equally over 12 months and is not dependent on water purchased. With no current capacity availaibe, the City would have to fund required construction costs within TCWA or find themselves partners to team with for the construction. Based upon previous discussions with TCWA personnel, a connection fee of approximately $3.5 million per 1 MGD of capacity is a reasonable assumption of what would be assessed to new customers. Currently, TCWA has facilitates near the intersection of E. 215th St. and Ore Road, approximately 7 miles east of the City. Table VI.3 has a cost opinion for this option. This opinion also assumes a connection charge of $3,500,000.

Table VI.3: Cost Opinion on TCWA Supply

Item No.	Description	Quantity	Units	Unit Price	Cost
1	12" PVC	35,800	LF	$55	$1,969,000
2	Connections	3	EA	$5,000	$15,000
3	Valves	17	EA	$3,000	$51,000
4	Road Crossings	11	EA	$10,000	$110,000
5	Pump Station	1	EA	$200,000	$200,000
6	Master Meter	1	EA	$75,000	$75,000
7	Driveway Crossings	36	EA	$2,000	$72,000
8	Highway 291 Crossing	1	LS	$50,000	$50,000
9	Railroad Crossing	1	LS	$50,000	$50,000
10	Air Release Valves	4	EA	$2,000	$8,000
11	Flushing Hydrant	10	EA	$3,750	$37,500
12	Stream Crossing	190	FT	$500	$95,000
	(Directional Bore and Case)				
13	SCADA Modifications	1	LS	$5,000	$5,000
14	Bond/Insurance/Mobilization	1	LS	$85,000	$85,000
15	Connection Fee	1	LS	$3,500,000	$3,500,000
		Construction Cost			$6,322,500
		Contingency		15%	$948,375
		Engineering, Legal, & Admin.		10%	$632,250
		Construction Observation		4.5%	$284,513
		Survey		5.0%	$316,125
		Total			$8,503,763

VII. WATER SUPPLY COMPARISON AND RECOMMENDATIONS

Four different suppliers were evaluated to provide potable water to the City. The evaluation consisted of construction costs involved in each alternate, water rates, future costs, and ease of construction. The four Suppliers are listed below:

Cass No. 2—Existing facilities on 211th and along Peculiar Drive. Supplier purchases water from KCMO (Section III.A)

KCMO—Connection at Raymore elevated tank on Highway J, south of Hubach Hill Rd., produces City's existing supply (Section VI.A)

WaterOne—Connection near the intersection of 175th St. and Kenneth Rd in Johnson County, Kansas (Section VI.B)

TCWA— Connection near the intersection of E. 215th St. and Ore Rd (Section VI.C)

The advantage and disadvantage of each alternate is analyzed in Section VII.B. In order to help

distinguish between the alternates, a decision matrix was made to prioritize the advantages and disadvantages of each supplier.

A. Decision Matrix:

The following decision matrix was created in order to aid in selecting the appropriate supplier for recommendation. Points are then awarded to each supplier and the supplier with the most points is the recommended solution. Table VII.1 shows a breakdown of the matrix.

Table VII.1: Supplier Decision Matrix

Item	Consideration	Percent
1	20-Year Life Cycle Analysis	20
2	Water Rates	25
3	Capital Cost	20
4	Maintenance (Time) Requirements	10
5	Environmental	10
6	Accessibility	5
7	ROW Acquisition	5
8	Utility Consideration	5
		100

B. Benefits and Deficiencies of Each Alternate:

1. *Cass No. 2*

Benefits:

- Lowest capital costs
- Least amount of new waterline required
- No new right of way or easements required
- Most waterlines under the City's responsibility are within City Limits.
- Land Disturbance permit not required for supply improvement

Deficiencies:

- Operation and Maintenance Fee in addition to water costs
- Cost for 15% water loss is required by contract
- If Cass 2 replaces/upgrades internal supply mains they may assess the City a portion of the cost as shared facilities, especially if additional flow is made available.

2. Kansas City, MO

Benefits:

- Lowest water rate

- Significant replacement or repairs on the new supply main are unlikely within 30 years or more after construction
- Lower capital costs than the WaterOne and TCWA construction
- Less right-of-way acquisition and easement requirements than WaterOne and TCWA options

Deficiencies:

- Capital costs higher than maintaining Cass No. 2 supply
- Greater chance of right-of-way, easement, and utility conflicts than Cass No. 2
- Larger area of disturbed land for construction than Cass No. 2
- City staff will have to monitor approximately 2.7 miles of waterline outside of City limits

3. WaterOne

Benefits:

- No connection fee
- Lower water rates than Cass No. 2 and TCWA

Deficiencies:

- This supply requires the most supply main construction.
- Largest chance of right-of-way, easement, and utility conflicts
- Inter-state design regulation differences
- City staff will have to monitor approximately 11 miles of waterline outside of City limits
- Larger capital costs that Cass No. 2 or Kansas City
- Largest area of disturbed land for construction

4. Tri-County Water Authority

Benefits:

- City may become a voting member of the Authority

Deficiencies:

- This supply is the most expensive.
- Largest connection fee
- Higher water rates than Kansas City and WaterOne.
- City staff will have to monitor approximately 7 miles of waterline outside of City limits
- Greater chance of right-of-way, easement, and utility conflicts than Cass No. 2 or Kansas City
- Larger area of disturbed land for construction than Cass No. 2 or Kansas City
- Second highest water rate

C. Weighted Decision Matrix for Each Option:

Below is a ranking of each supply based on the categories selected for this study. Each alternate with the "best" consideration for each category is awarded full points. Every other alternate is a percentage based on a comparison against the top ranked.

Table VII.2 Weighted Decision Matrix

Item	Consideration	Percent	Cass No. 2	KCMO	WaterOne	TCWA
1	20-Year Life Cycle Analysis	20	15	20	17	18
2	Water Rates	25	10	25	24	14
3	Capital Cost	20	20	7	5	3
4	Minimizing maintenance time	10	8	10	5	7
5	Environmental	10	10	8	4	6
6	Accessibility	5	5	4	2	3
7	ROW Acquisition	5	5	4	2	3
8	Utility Consideration	5	5	4	2	3
		100	78	82	61	57

The Kansas City, Missouri source is the high ranked supply based upon the results of the weighted decision matrix. This supply has the lowest water rates and the lowest capital costs of any of the three new suppliers. As water demands grow within the City and Cass No. 2, waterline improvements within Cass No. 2 necessary to feed water to the City are likely to be required. Associated costs for these improvements are likely to be shared with the City. A direct supply from Kansas City requires a one-time connection fee for construction of the existing transmission main. Future KCMO system improvements, however, will be paid for within the Kansas City rates, which also would be added to the Cass No. 2 rate, along with a 15% increase for water losses, if the City maintained its current water supply.

D. Kansas City, MO Hydraulics

Hydraulic analyses were performed for the same 18 scenarios identified in Section IV. To facilitate the water supply entering from a different location within the City's distribution system, check valves and gate valves forming the four pressure zones were considered open or removed. Additionally, as there was no dedicated line to the ground storage tank, it was valved off for these trials. This allowed the City to operate as one large pressure zone. Table VII.3 contains the hydraulic results for utilizing the KCMO supply and none of the improvements from Section IX.

Table VII.3 – Hydraulic Results without Improvements and KCMO Supply			
Scenario	Low Pressure (psi)	Average Pressure (psi)	High Pressure (psi)
Year 2013			
• ADF	28.1	62.9	99.5
• MDF	28.0	62.8	99.4
• PHF	27.8	62.2	99.2
Year 2018			
• ADF	28.1	62.9	99.5
• MDF	28.0	62.7	99.4
• PHF	27.7	62.1	99.1
Year 2033			
• ADF	28.0	62.8	99.4
• MDF	27.9	62.6	99.3
• PHF	27.4	61.7	98.8

The only areas that did not meet the 35 psi goal were along the 12-inch transmission main from the KCMO supply. Without these two locations, the lowest pressure in the system would increase approximately 14 to 21 psi utilizing KCMO and one pressure zone. The average pressure would increase approximately 2 to 4 with this scenario; however, the highest pressure would drop approximately 15 to 19 psi. Figure VII.1 shows the hydraulic grade within the elevated storage while utilizing the existing (blue) and KCMO (red) supplies at 2013 demands.

Figure VII.1: Elevated Storage Tank Hydraulic Grades

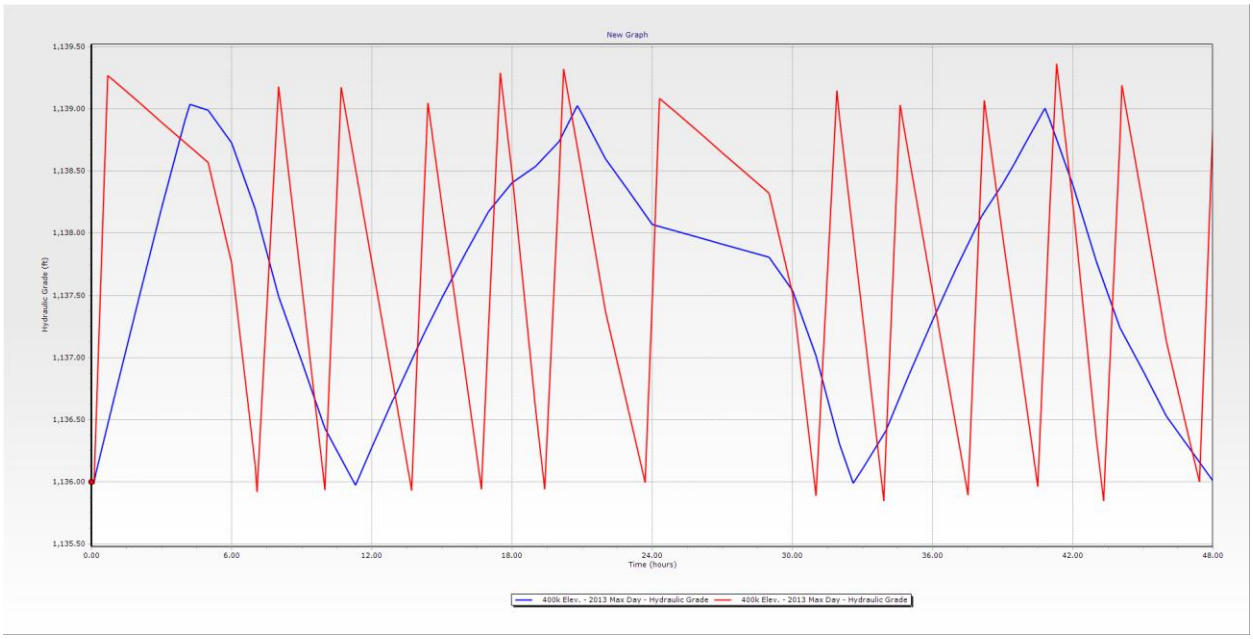

With the entire system receiving flow and pressure from one source, the tank drains more rapidly, however, due to the pressure gradient from the Kansas City source, the City's tank also is replenished in much less time. Table VII.4 contains the modeling results for the KCMO supply with the improvements from Section IX.

Table VII.4 – Hydraulic Results with Improvements and KCMO Supply			
Scenario	Low Pressure (psi)	Average Pressure (psi)	High Pressure (psi)
Year 2013			
• ADF	28.1	62.9	99.5
• MDF	28.0	62.8	99.4
• PHF	27.8	62.5	99.2
Year 2018			
• ADF	28.1	62.8	99.5
• MDF	28.0	62.8	99.4
• PHF	27.8	62.4	99.1
Year 2033			
• ADF	28.0	62.8	99.4
• MDF	27.9	62.7	99.3
• PHF	27.5	62.1	98.9

The improvements did not make a large change on the low, average, and high pressures within the distribution system. With this water supply, the improvement to install a larger diameter waterline from Master Meter 1 can be eliminated. The rest of the improvements in Section IX should still be pursued to eliminate reduce water loss from deficient pipes and increase water quality by system looping.

Table VII.5 estimates rates and future water costs from the District and KCMO based upon the following assumptions:

- $3,772,389 SRF Loan as described in Section XI below
- Water rate increases of 5% per year
- District O & M rate increases of 3% per year
- 1 repump charge from KCMO

Table VII.5 – Rate and Water Purchase Cost Opinions for future Water Suppliers

Source	Parameters	Year 2018	Year 2033
Cass PWSD#2			
	Rate per 1,000 gallons* (Effective 5/1 ea. yr)	$5.57	$ 10.63
	Assumed Increase	5%/3%	5%/3%
	Cost of Water Purchased	$ 581,248	$ 1,491,786
Kansas City			
	Rate per 1,000 gallons** (Effective 5/1 ea. yr)	$ 3.31	$6.89
	Repumping fee per 1,000 gallons	$ 0.30	$0.63
	Assumed Increase	5.0%	5.0%
	Cost of Water Purchased	$ 377,416	$ 1,055,996
	Loan Repayment	$ 241,988	$ 241,988
	Total	$ 619,404	$ 1,297,984

*Water rate from Cass 2 consists of three components: Water cost from Kansas City, Cass 2 O&M cost, and Cass 2 debt service on shared facilities per Water Purchase Agreement (Annual rate increase is assumed at 5% for KC rate and 3% for O&M)
**Includes Kansas City as a direct water wholesaler at their wholesale restricted rate plus 1 repump charge (Annual rate increase is assumed at 5%)

VIII. Historical Operating & Maintenance Costs

The City prepares an annual budget and maintains records of revenues and expenses. A summary of the City's water department finances for the last two years is included in Table VIII.I.

Table VIII.1: Summary of Revenues and Expenses

	2011	2012	2013
Beginning Balance	$1,266,286.79	$1,161,548.79	$1,236,239.00
Revenues			
Revenue from water sales			
Water Operating Revenues	$744,362.00	$798,257.36	$922,402.00
Water Connection Fees	$1,900.00	$0.00	$1,600.00
Non-Operating Revenue			
Interest Income	$69,500.00	$58,500.00	$62,769.00
Penalties	$31,000.00	$25,000.00	$0.00
Gain on sale of asset			$846.00
Tower Rental	$20,462.00	$21,037.34	$21,668.00
G.O. Principal	$111,000.00	$94,000.00	$51,384.00
Total Revenue	$978,224.00	$996,794.70	$1,060,669.00
Expenses			
Cost of Sales			

Cost of Water Purchased	$304,171.30	$423,765.83	$419,630.00
Pump/Line Maintenance	$5,571.00	$10,179.74	$22,718.00
Subtotal	$309,742.30	$433,945.57	$442,348.00
Operating Expenses			
Salaries/Wages	$170,371.00	$162,440.06	$166,429.00
Benefits/Payroll Taxes	$66,343.00	$62,725.77	$84,781.00
Workers Compensation	$4,000.00	$0.00	$4,250.00
Uniforms	$1,192.00	$865.85	$1,238.00
Travel and Training	$1,648.00	$2,153.32	$934.00
Employee Testing	$0.00	$0.00	$353.00
Office Supplies	$14,861.00	$16,181.97	$4,200.00
Dues and Subscriptions	$1,137.00	$2,006.94	$2,136.00
Postage	$4,985.00	$4,755.80	$3,363.00
Bankcard Fee	$0.00	$0.00	$8,568.00
Office machines	$2,147.00	$3,835.73	$4,150.00
Public hearing	$0.00	$0.00	$344.00
Audit	$3,000.00	$0.00	$3,075.00
Accounting	$13,616.00	$19,614.09	$10,446.00
Legal	$14,179.00	$15,827.59	$24,684.00
Litigation	$0.00	$3,052.56	$4,505.00
Insurance	$0.00	$7,949.41	$6,147.00
Engineering	$5,500.00	$9,351.42	$6,086.00
Contractual Payroll	$0.00	$0.00	$1,147.00
Contractual Economic Development	$0.00	$0.00	$0.00
Contractual - Water	$1,465.00	$2,397.00	$12,530.00
IT Maintenance	$9,661.00	$16,285.98	$7,512.00
Hardware Costs	$0.00	$0.00	$1,915.00
Software Costs	$0.00	$0.00	$4,904.00
Communications	$0.00	$4,832.14	$0.00
Telephone	$3,000.00	$0.00	$1,398.00
Cell Phones	$1,394.00	$0.00	$0.00
Shop Supplies	$0.00	$0.00	$0.00
Administration Building	$6,640.00	$1,093.58	$13,238.00
Public Works Building	$5,860.00	$0.00	$4,240.00
Vehicle Insurance	$1,000.00	$0.00	$2,100.00
Vehicle Maintenance	$1,171.00	$4,963.03	$1,752.00
Fuel and Oil	$6,428.00	$5,630.82	$5,170.00
Equipment Maintenance	$0.00	$2,936.09	$0.00
Tower Maintenance	$4,113.00	$0.00	$37.00
Meter Maintenance	$1,944.00	$1,773.18	$6,578.00
Utilities	$5,936.00	$11,250.21	$6,023.00

Equipment purchased	$0.00	$0.00	$0.00
Capital Purchases	$19,513.00	$4,059.55	$3,680.00
CIP Water	$23,938.00	$0.00	$0.00
Existing Bond Principal Payment	$172,500.00	$175,000.00	$229,313.00
Interest	$122,000.00	$120,500.00	$128,199.00
Bond Fees	$6,500.00	$2,500.00	$10,859.00
Transfers Out	$0.00	$13,500.00	$193,105.00
Amortization			$1,563.00
Subtotal	**$696,042.00**	**$677,482.09**	**$970,952.00**
Total Expenses	**$1,082,962.00**	**$1,111,427.66**	**$1,413,300.00**
Net Revenue	**($104,738.00)**	**($114,632.96)**	**($352,631.00)**
Ending Fund Balance	**$1,161,548.79**	**$1,046,915.83**	**$883,608.00**

Table VIII.2 shows the breakdown of current City water rates. According to the "Water Rate Survey Results 2012" published by the Missouri Rural Water Association, the average Missouri city customer was charged $32.14 for 5,000 gallons. The range of survey results was from $9.50 to $93.78 for 5,000 gallons. The average minimum charge for cities was $13.56 per month, with a range from $2.75 to $46.12 per month.

Table VIII.2. Current Water Rates

Unit	City of Peculiar
Surcharge (Monthly Minimum Charge) 0 to 1,000 gallons	$17.21
Each additional 1,000 gallons	$12.77
Primacy fee ($3 annual fee/meter to DNR)	$0.25
Monthly bill for 5,000 gallons	$68.54

The City's average monthly bill is greater than the average for respondents to the Missouri Rural Water Association survey. Government funding agencies consider a monthly average water bills that exceed 2% of the median household income as an eligibility factor in determining qualifications for grant funding. The US Census Bureau lists a median household income of $62,654 for the City (listed for the year 2010). Based on the City's income level, 2% of the median household income would equal $104.42 per month. This indicates that the City's water rates are not excessive.

IX. Recommended Improvements:

After reviewing the system with the updated hydraulic model and based upon consultation with operating and management staff, several key improvements were selected. Each item is ranked in priority order. See enclosed System Map for all the improvements listed. Opinions of probable construction cost

are included in Section X.

A. Storage Requirements:

The current storage capacity of the City meets the DNR requirements; however, we recommend the City install passive mixing systems into both storage tanks. Mixing systems include separate inlets and outlets while often utilizing a single manifold pipe within a storage tank. Typically, a passive mixing system will utilize the pressure required to fill the tank to deliver water further away from where the inlet pipe penetrates the tank shell. The separate outlet will then be located apart from the inlet to avoid short-circuiting in the tank (to ensure the last water into the tank is not the first water out of the tank). Mixing systems reduce spikes is disinfection byproducts, disinfectant residual loss, and water age.

Currently, water is fed into the ground storage tank and then repumped into the elevated storage tank. The pumping facilities do not have emergency back-up power and thus the installation of a generator at this location is recommended. The generator should be connected into the City's SCADA system and include an automatic transfer switch. These options will allow the generator to turn on automatically and switch the pumps power source from its existing electrical service to generator.

B. Distribution Improvements:

A list of recommended distribution improvements (listed in order of priority) is shown below:

1. Install an 12-inch waterline along Peculiar Drive between the existing 12-inch at the intersection of Peculiar Drive and S. Hurley St. and the waterlines at the intersection of Main St. and E. North Rd., replacing the existing waterlines. This will loop part of the distribution system and replace smaller diameter waterlines.

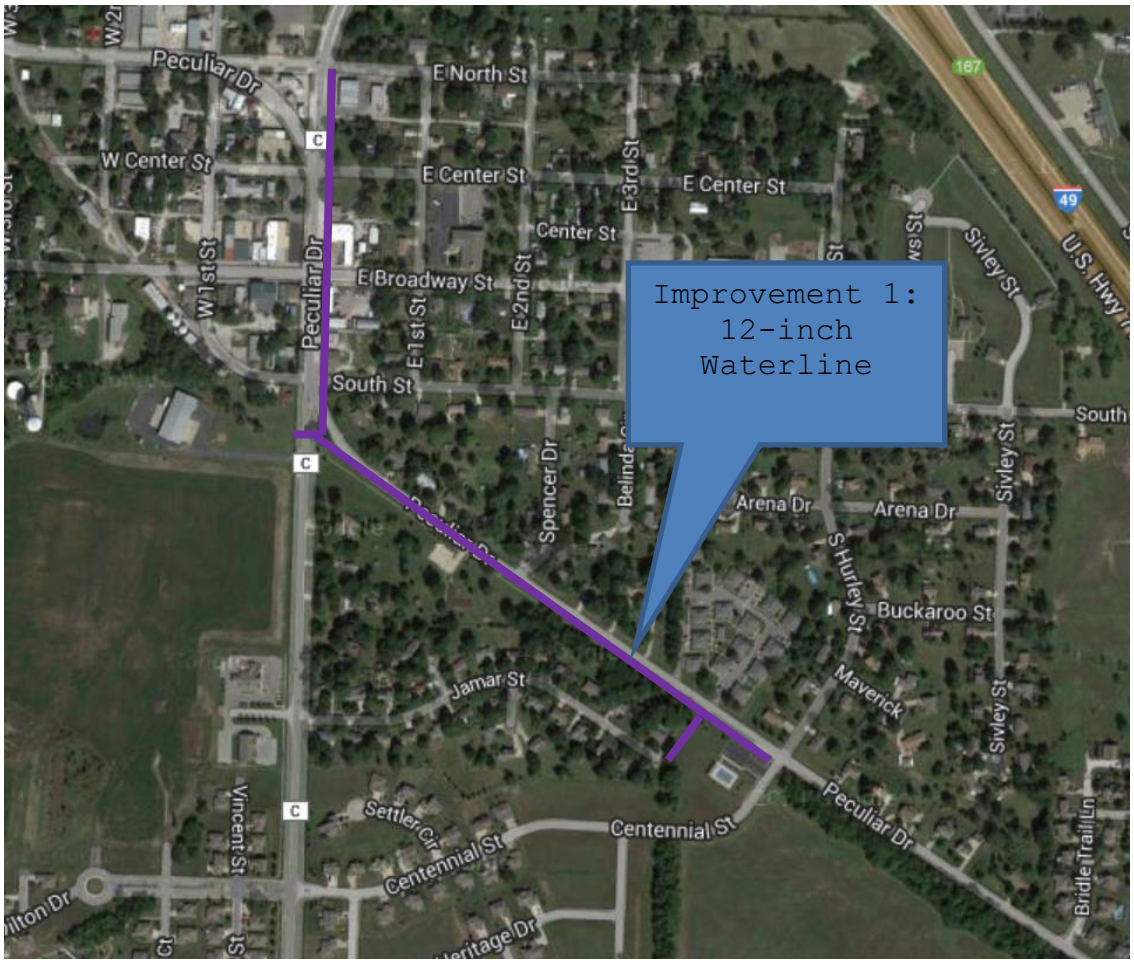

2. Install 8-inch waterlines within the Spencer Addition along Clairmont St, Soryl Ave, and Hillcrest Drive. These will replace smaller diameter lines and relocate potable water lines greater than 10' from existing sewer lines as required by the DNR.

3. Install an 8-inch waterline along Harr-Grove Rd between Elm St. and Highway J, replacing the existing smaller diameter waterlines that are prone to breaks.

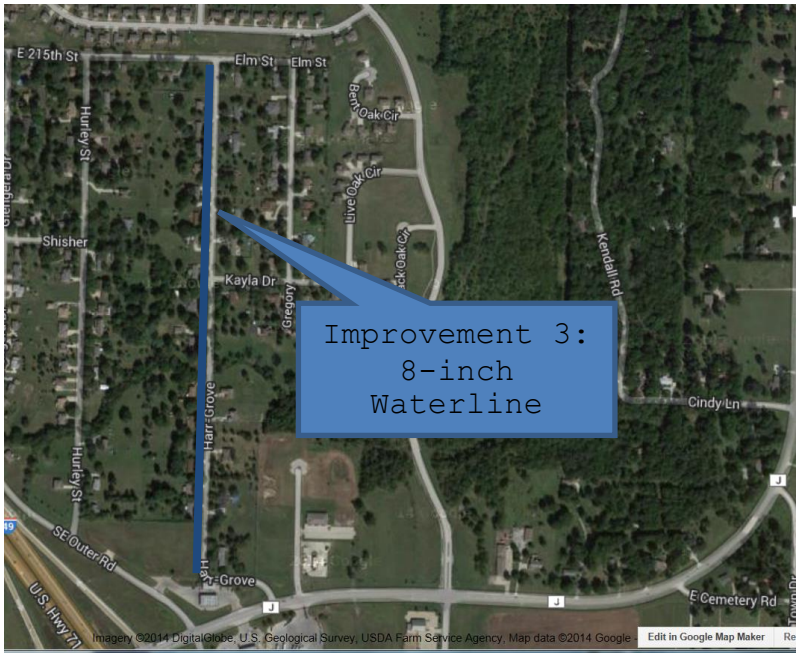

4. Install an 8-inch waterline along Elm St. between Gregory and School Rd, replacing the existing smaller diameter waterlines that are prone to breaks.

5. Install an 8-inch waterline along Gregory between Elm St. and Harr Grove Rd, replacing the existing smaller diameter waterlines that are prone to breaks.

6. Install a 12-inch waterline along Peculiar Dr. between Maple Ave. and Willow St., replacing the existing smaller diameter waterlines and increasing flow to the subdivisions in the north area of Pressure Zone 3.

7. Install a 12-inch waterline on along E. Broadway St between E. 3rd St. and N. Main St., replacing the existing smaller diameter waterline.

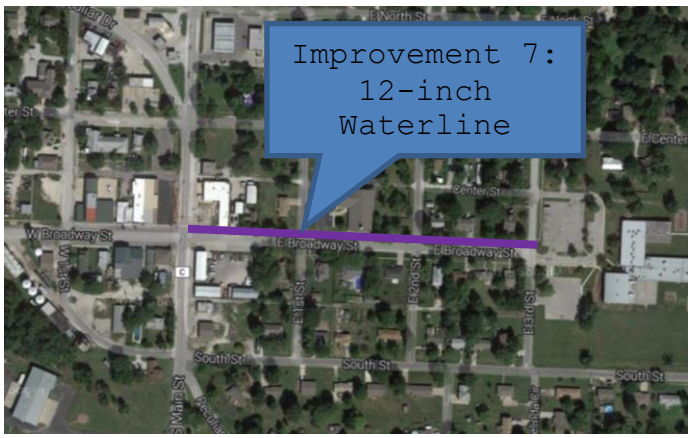

8. Install a 12-inch waterline along E. 3rd St. between E. South St. and Legend Ln., replacing the existing smaller diameter waterline.

9. Install a 12-inch waterline along Harper Rd. between Master Meter No. 1 and the existing 12-inch waterline north of State Route YY. This waterline will increase the pressures in Pressure Zone 1 so that the minimum available is above 35 psi. The pressure loss in the supply line will decrease to 19 psi from 38 psi. This improvement is not necessary if the City opts for the direct KCMO water supply source.

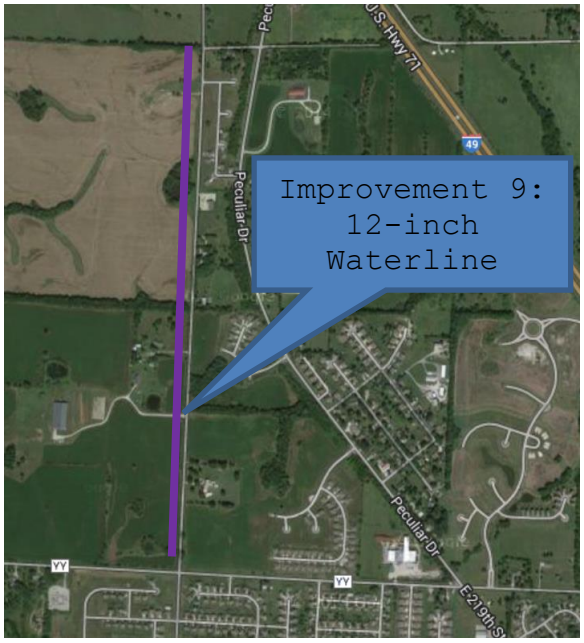

All improvements are also shown on the enclosed distribution system map.

Per the DNR *Minimum Design Standards for Missouri Community Water Systems* effective December 10, 2013, Section 8.1.4c states "In order to provide increased reliability of service and reduce head loss, dead ends shall be minimized by making appropriate tie-ins whenever practical."

The following improvements will increase system looping and should be made as City funds allow or when other projects occur in the area.

10. Looping Improvements to remove dead-end lines from distribution system and improve water loss:

a. 1st St. south of Elm St. – 8” Loop

b. Cindy Lane, west of Highway J –8” Loop

c. Centennial Farms as subdivision grows (Centennial Circle, Pioneer Dr. and Legacy Drive) – 8” Loop

d. Alley south of W. Broadway St. and west of N. Main St. – 8” Loop

e. Alley north of W. Broadway St. and west of N. Main St. – 8” Loop

f. W. 2nd St. , north of W. Center St. – 6” Loop

g. E. 2nd St., north of E. Broadway St. – 6” Loop

h. W. 2nd St. , north of W. Broadway St. – 6” Loop

i. Cross W. North St. at W. 1st St. – 6” Loop

j. Cross Schug Ave. to 6” waterline, south of Summerskill Rd – 8” Loop

k. Cross State Route YY at Quail Ridge Rd – 8” Loop

l. 220th St, across S. Harper Rd – 8” Loop

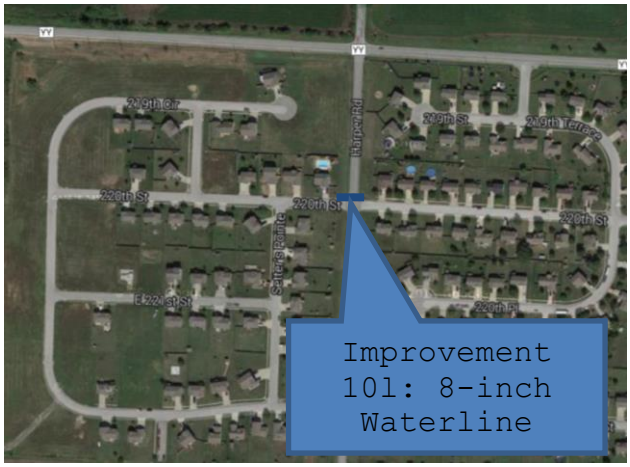

m. Cross S. Harper Rd north of State Route YY at existing 2” waterline – 6” Loop

Cost opinions for these improvements are located in Appendix C.

None of the waterline improvements will increase the operating and maintenance costs for the City. Many of them will reduce the line breaks and water loss experienced within the City and may thus lower water purchase costs and repair costs. Distribution system water quality will be enhanced by looping dead end mains.

C. Supply Improvement:

Based upon discussions the City had with potential water suppliers, the direct KCMO source is the best long term option for the City. This will provide the City with a reliable source of water for the foreseeable future and remove the potential for being charged to replace and upgrade shared facilities within the Cass PWSD No. 2 system. If Kansas City makes internal improvements to facilities that serve the wholesale customers, the cost is shared by all customers of the system. Changing water supply supplier from Cass 2 to KCMO (direct) should not increase the City’s operating and maintenance budget.

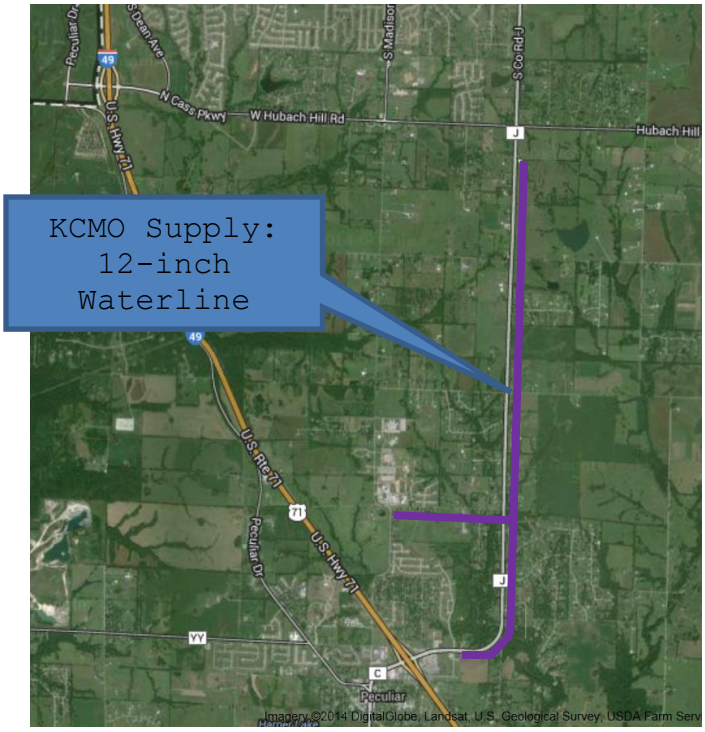

D. Emergency Interconnect:

Currently, the City has two emergency connections to water suppliers (Cass County PWSD No. 10 and No. 7). If the City connects directly to KCMO, the City should maintain its connections with Cass County PWSD No. 2 and begin negotiations on an emergency supply contract. This would be to the mutual benefit of both utilities.

E. Valves and Flushing Hydrants:

Currently the City has many water mains that cannot be isolated during main breaks or other emergencies. The enclosed Improvement Map details where additional valves should be installed as the City can. The map also indicates a few places where additional fire hydrants should be installed to allow areas to be flushed. These are also improvements that should be made as City funds allow, or when other projects occur in the area.

F. Security

Currently the altitude valve located at the ground storage tank and elevated storage tank site is located outside of the fencing, near the access road. To increase security, the valve can be relocated to a site that is fenced-in or where a fence can be added.

Unauthorized entry alarms at the master meter vaults currently only alert Cass PWSD No. 2. With SCADA modifications, these alarms could be added to the City's SCADA system, as well as an

unauthorized entry alarm at the City's pump station.

X. Opinions of Probable Cost

A summary of the opinions of cost for the system improvements outlined in Section IX (except looping improvements) is shown below in Table X.1. These recommended improvements have been prioritized according to the hydraulic analyses in Section IV. As development occurs, the timing of all or part of these improvements may be altered according to system requirements. A detailed opinion of probable cost for each improvement is included in Appendix C of this report.

Table X.1 - Cost Opinion of Recommended Improvements

Improvement	**Probably Cost**
Supply Improvement	$3,772,389
Improvement 1	$640,393
Improvement 2	$369,941
Improvement 3	$292,059
Improvement 4	$261,482
Improvement 5	$184,248
Improvement 6	$452,156
Improvement 7	$184,046
Improvement 8	$278,154
Tank Mixing Systems (2)	$100,000
Emergency Generator	$35,000
Total	$6,569,868

XI Funding Options

USDA – Rural Development

Rural Development Water and Wastewater loan and grant funds may be used to construct, enlarge, extend, or improve water and waste water systems in communities with a population of 10,000 or less. Funds are available to public entities such as municipalities, counties, special-purpose districts and Indian tribes. In addition, funds may be made available to corporations operated on a not-for-profit basis. Priority is given to public entities in areas with less than 5,500 population to restore a deteriorating water supply, or to improve, enlarge, or modify a water facility or inadequate waste facility. Also, preference is given for projects that merge small utilities and projects serving low-income communities. Eligibility for grant and loan funding is based on median household income (MHI), project costs and current rates.

Rural Development offers up to 75 percent grant funds in combination with loan funds for entities that qualify. Interest rates depend upon the MHI of the project area. These are market rate, intermediate rate, or poverty rate. The 2000 median household income (MHI) for Peculiar was $44,768 according to U.S. Census Bureau information. RD is still using 2000 MHI figures in funding determinations. Since the State MHI exceeded the State Amended 2000 census figure of $39,043, the City would only be eligible for 100% loan, at the current market interest rate of 4.375%. When RD adopts the 2010 data, the City's eligibility will not improve (City 2010 MHI $62,654 to State's 2010 MHI of $47,333). The 33-year loan amortization, with first two years interest only, results in lower annual payments when compared to other bond financing options. Security for a RD loan is normally provided by a revenue bond passed by a simple majority of votes cast.

State Revolving Fund and Rural Water Grant Program

This program is available through the DNR for both water and wastewater projects. The market interest rate is subsidized and the loan term is limited to a maximum of 20 years. Applicants are scored based on need. The annual application deadline is generally November 15th. Treatment and distribution projects are eligible, but reservoir projects are not. The current SRF drinking water loan fund interest rate is approximately 2.5% with fees included. Security for an SRF loan is also provided by voter approved revenue bonds. The City is currently on the list for this funding source for the direct KCMO source project (See Appendix D). City will need to advertise, conduct, and document an environmental assessment public hearing for this funding source.

Private Financing/Bond Issue

This is a common method of obtaining long term financing for projects. These bonds are retired from water revenues generated by the rate structure. Current bond rates for 20-year bonds are in the range 3.75-4.50%. The interest rates are low enough to be competitive with funding agencies such as Rural Development; however, the shorter term will result in higher annual payments. Again, a revenue bond issue must be approved by a majority of the votes cast in an election. The private market also requires higher reserve requirements to be generated by the rate structure. Using private financing may streamline project development by minimizing the number of review agencies before the project is approved for construction.

Table XI.1 details the effects these loans would have on the City's current water rates if all improvements were constructed and all 1,537 current customers purchased 5,000 gallons for the course of the loan. The last two columns represent a $1.71 reduction in price per 1,000 gallon ($8.85 decrease for 5,000 gallons) if the City were not paying the Cass No. 2 rate and only the Kansas City rate per 1,000 gallons.

Table XI.1 - Current Rates and Required Rate Adjustments

Current Avg. Water Usage per month per meter (gallons)	Average Residential Bill	Current Number of Residential Meters				Average Residential Bill minus current Cass 2 charges	
5,000	**$ 68.54**	**1,537**					
USDA RD Loan/No Grants - Amount Funded	Interest Rate	Loan Period (Years)	Yearly Payment	Adjusted Average Residential Bill	% Increase 5,000 gallon bill	Adjusted Average Residential Bill with $1.71 per 1,000 gallon reduction	% Increase 5,000 gallon bill
$6,569,868	4.375%	33	**$379,898**	**$ 89.14**	30%	**$ 80.59**	18%
SRF Loan/No Grants - Amount Funded	Interest Rate	Loan Period (Years)	Yearly Payment	Adjusted Average Residential Bill	% Increase 5,000 gallon bill	Adjusted Average Residential Bill with $1.71 per 1,000 gallon reduction	% Increase 5,000 gallon bill
$6,569,868	2.50%	20	**$421,438**	**$ 91.39**	33%	**$ 82.84**	21%
SRF Loan/ with $500,000 Grant - Amount Funded	Interest Rate	Loan Period (Years)	Yearly Payment	Adjusted Average Residential Bill	% Increase 5,000 gallon bill	Adjusted Average Residential Bill with $1.71 per 1,000 gallon reduction	% Increase 5,000 gallon bill
$6,069,868	2.50%	20	**$389,365**	**$ 89.65**	31%	**$ 81.10**	18%
Private Financing	Interest Rate	Loan Period (Years)	Yearly Payment	Adjusted Average Residential Bill	% Increase 5,000 gallon bill	Adjusted Average Residential Bill with $1.71 per 1,000 gallon reduction	% Increase 5,000 gallon bill
$6,569,868	4.25%	20	**$494,184**	**$ 95.33**	39%	**$ 86.78**	27%

XII. Conclusion

Sections VI and VII discussed the City's future water supply options which included continuing with their current source (Cass #2) or purchasing water from a new source directly (Kansas City, Tri-County Water Authority, or WaterOne of Johnson County, KS). A weighted decision matrix was developed to help determine the best option for the City's water needs going forward. The matrix showed that purchasing water directly from Kansas City would be the best option for the City's water needs moving forward. Kansas City was the highest rank supplier based in the following criteria of the matrix:

- Lowest costs for 20-year life cycle analysis
- Lowest water rates

Hydraulic modeling showed that converting to a KCMO direct supply and utilizing one pressure zone (instead of the current four) would increase the low and average pressures within the distribution system but would reduce the highest pressures (down to approximately 99 psi from approximately 115 psi). All pressures would be within MDNR recommendations.

A yearly water cost opinion was then developed to compare KCMO to Cass 2 for the years 2018 and 2033. The Cass 2 water costs included yearly increases of 5% for the water rate and 3% for operating and maintenance costs. KCMO costs included an annual rate increase of 5% and a loan repayment of $241,988 per year. Initially KCMO annual water costs were higher than Cass 2; however, during the year 2033 the KCMO water cost was approximately $200,000 less than those from Cass 2.

With the City already on the SRF funding list, we recommend the City continuing talks with KCMO to get an acceptable water purchase agreement agreed upon.

Distribution system improvements were discussed in Section IX. These distribution system improvements initially focused on replacing deficient waterlines, followed by replacing small diameter waterlines, and finally looping and removing dead-ends. The City should prioritize the following five projects and strive to complete them as available funds and governmental assistance allows:

- Install a 12-inch waterline along Peculiar Drive from Hurley St. to Main St. and then north to E. North St.
- Installing 8-inch waterlines within the Spencer Addition Subdivision

- Replace the existing waterline on Harr Grove Rd.
- Replace the existing waterline on Elm St.
- Replace the waterlines on Gregory St. and Kayla Dr.

We recommend the City begin the application process for both SRF and RD funding for these projects.

Future waterlines that are not a part of the recommended improvements, but that are constructed inside the City, should be a minimum of 8-inches diameter in size. Also, as improvements and upgrades are constructed on the system, any lines 2 or 3-inches in diameter should be evaluated for replacement. Also, dead end mains should be looped to reduce water consumed by excessive flushing.

While this report evaluated the potential for system growth in the next twenty years, individual impacts of new subdivisions, industrial customers, and other large scale demands or system improvements should be reviewed on a case-by-case basis and compared with this report and previous studies to determine what improvements are necessary.

APPENDIX A

Water Purchase and Sales Contracts

APPENDIX B

Hydraulic Analysis Reports

APPENDIX C

Opinions of Probable Cost

APPENDIX D

SRF Intended Use Planning List Letter

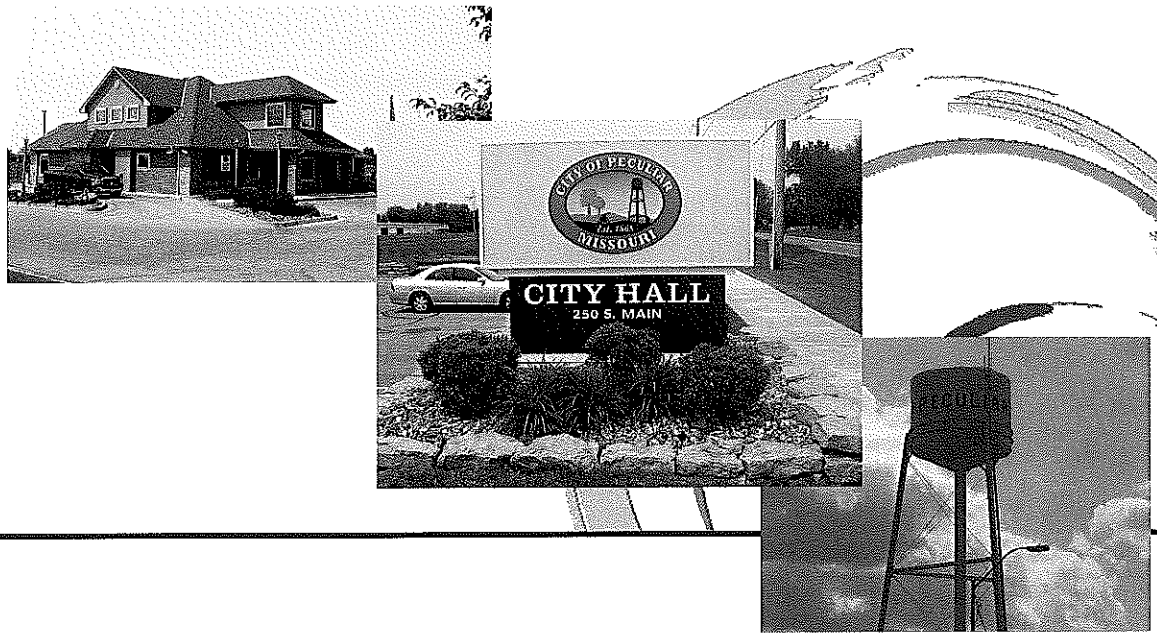

Project Manual

Manual of Practice
for
Water Main Extensions
For
The City of Peculiar, MO

2014

Project No. 0313045.01

LARKIN
LAMP RYNEARSON

9200 Ward Parkway, Suite 200
Kansas City, Missouri 64114
[P] 816.361.0440
[F] 816.361.0045
www.LRA-Inc.com

Leaving A Legacy Of Enduring Improvements To Our Communities
Purpose Statement

MANUAL OF PRACTICE FOR WATER MAIN EXTENSIONS For PECULIAR, MISSOURI

SUBJECT — PAGE TO PAGE (INCLUSIVE)

01000 - Special Construction Requirements ..... 1 : 8
01010 - Summary of Work – General ..... 1 : 5
01340 - Shop Drawings, Product Data and Samples ..... 1 : 4
01630 - Substitutions and Product Options ..... 1 : 2
01700 - Project Closeout ..... 1 : 4
01710 - Cleanup ..... 1 : 3
01720 - Project Record Documents ..... 1 : 2
02010 - Subsurface Conditions ..... 1 : 1
02221 - Trenching, Backfilling and Compaction ..... 1 : 9
02225 – Directional Bored Excavation ..... 1 : 7
02226 - Bored Excavations ..... 1 : 5
02270 - Erosion Control ..... 1 : 5
02575 - Street Repair and Driveway Repair ..... 1 : 3
02615 - Water Main - Ductile Iron Pressure Pipe ..... 1 : 7
02616 - Water Main - Polyethylene Encasement for Ductile Iron Pipe and Fittings ..... 1 : 4
02620 - Water Main - P.V.C. ..... 1 : 5
02640 - Water Main Valves, Hydrants & Accessories ..... 1 : 9
02674 - Water Main Pressure and Leakage Test ..... 1 : 4
02675 - Water Main Disinfecting ..... 1 : 4
02930 - Seeding, Fertilizing and Mulching ..... 1 : 6
03300 - Cast In Place Concrete ..... 1 : 10

CONSTRUCTION STANDARDS

1. General Notes
2. Thrust Block Detail
3. Stream Crossing
4. Test Meter Installation
5. Standard Fire Hydrant Detail
6. Standard Hydrant Installation with 90° Bend
7. End-of-Line Fire Hydrant Detail
8. Straddle Block
9. Air Release Valve Detail
10. Pavement Restoration
11. Casing Detail
12. State Highway Crossing
13. City and County Road Crossing
14. Backfill
15. Service Connection

DETAILED SPECIFICATIONS

PART 1 - GENERAL

1.00 FOREWORD

A. The provisions of this Section take precedence over the other provisions in these Specifications.

1.01 INSURANCE

A. Insurance for this Contract shall be types and amounts as outlined below:

1. Contractor's Liability:
   a. Workers' Compensation:
      (1) State: Statutory
      (2) Applicable Federal: Statutory
      (3) Employer's Liability:
      $2,250,000.00 Each Accident
      $2,250,000.00 Disease, Policy Limit
      $350,000.00 Disease, Each Employee
      (4) Broad Form All States Endorsement:
      (5) Benefits required by union labor contracts: As applicable.
   b. Commercial General Liability:
      $2,250,000.00 General Aggregate
      $2,250,000.00 Products-Completed Operations Aggregate
      $2,250,000.00 Personal and Advertising Injury
      $2,250,000.00 Each Occurrence
   c. Products and Completed Operations Insurance shall be maintained for a minimum period of 2 years.
   d. The general aggregate shall apply to this project only.
   e. Automobile Liability (owned, non-owned, hired):
      $2,250,000.00 Bodily Injury & Property Damage
      (Combined Single Limit)
   f. Umbrella Excess Liability:
      (1) Total insurance on all risks to be a minimum of $2,250,000.00
   g. Owner's protective liability in the name of the Owner and Engineer in the amount of $2,250,000.00. A copy of the policy shall be furnished to owner and engineer before notice to proceed will be issued.
2. Property Insurance:
   a. The Contractor will purchase property insurance including coverage for all materials and equipment to be incorporated or used in the Project when stored off the site or when in transit.
   b. The Contractor shall purchase the following:
      (1) All-Risk type in the amount equal to completed value.
3. Bonds:
   a. Performance Bond and Payment Bond:
      (1) Required.

b. Required bonds shall be in the amount of:
   (1) Performance:
      (a) 100% of Contract Sum.
   (2) Payment:
      (a) 100% of Contract Sum and as required to comply with Section 107.170 RsMo.
   (3) Form of bonds shall be:
      (a) EJCDC or AIA and as required by Section 107.170 RsMo.

4. Other instructions related to bonds or insurance:

B. The insuring company shall deliver to the Owner together with all certificates of required insurance a letter signed by an authorized representative and certifying that all provisions of the insurance requirements are complied with. Form of the letter is bound in these Specifications following the proposal form, except copy of Owner's protective liability policy shall be required in addition thereto.

C. The Contractor may not begin work of any nature until all insurance requirements are met and approved by the Owner's attorney.

1.02 SPECIFICATIONS

A. The specifications which sball govern the materials and equipment to be furnished and the work to be performed in the construction of the work under this Contract are identified and indexed in the Table of Contents at the beginning of this volume.

B. No attempt has been made in the designated specifications to segregate work to be performed by any trade or subcontract under any one specification or part thereof. Any segregation between the trade or craft jurisdictional limits will be solely a matter of agreement between the Contractor and his employees and his subcontractors.

1.03 CHANGES, APPROVAL OF MATERIALS, AND AUTHORITY OF CONSTRUCTION REPRESENTATIVE

A. Wherever the words "or equal" appear in the Plans and Specifications the Engineer shall be the sole judge as to whether an alternate product is equal to the product or trade name mentioned.

B. The Contractor shall submit to the Engineer at least six copies of shop drawings, catalog data, supporting data, specifications, etc., on all items of equipment and materials before ordering same. No equipment or material of any kind may be placed in the work until the Contractor and the Construction Representative have received written approval either by letter or by drawings, etc., stamped "Approved-Final." It shall also be the Contractor's responsibility to point out any variations from the Engineer's specifications in any items submitted for approval.

C. The project shall be constructed in accordance with the Contract Plans and Specifications unless a change order is received in writing from the Kansas City office of Larkin Group,

Inc. The Construction Representative will make general inspection of the construction, but will have no authority to make or to allow changes in design or construction. Request for changes desired by the Contractor shall be submitted by him in writing to the Engineer sufficiently in advance to allow proper investigation and consideration. Otherwise, the Engineer will not be responsible for delays.

1.04 MAINTENANCE OF TRAFFIC

A. The Contractor shall conduct his work so as to interfere as little as possible with public travel, whether vehicular or pedestrian; whenever it is necessary to cross, obstruct, or close roads, driveways, and walks, whether public or private. The Contractor shall at his own expense provide and maintain suitable and safe bridges, detours, or other temporary expedients for the accommodation of public and private travel, and shall give reasonable notice to owners of private drives before interfering with them; provided however, that such maintenance of traffic will not be required at any point where the Contractor has obtained permission from the owner and tenant of private property, or from the authority having jurisdiction over the public property involved, to obstruct traffic at any designated point thereon and for the duration of whatever period of time as may be agreed upon.

1.05 EXISTING UNDERGROUND INSTALLATIONS AND STRUCTURES

A. Pipe lines and other existing underground installations and structures in the vicinity of the work to be done hereunder are not indicated on the plans. The Contractor shall make every effort to locate all underground pipe lines, conduits and structures by contacting owners of underground utilities and by prospecting in advance of trench excavation.

B. Any delays or extra cost to the Contractor caused by pipe lines or other underground structures or obstructions not shown by the plans, or found in locations different than those indicated, shall not constitute a claim for extra work, additional payment, or damages.

1.06 SUBSURFACE CONDITIONS

A. Contractor is to satisfy himself as to the nature of the material to be encountered, including rock excavation and possible ground water and take all conditions into account in his bid.

1.07 EROSION CONTROL

A. The Contractor will be required to exercise reasonable erosion control of disturbed areas during the construction period through the use of check dams, siltation pools, mulching, etc.

1.08 HISTORICAL/ARCHAEOLOGICAL

A. If, during the course of construction, evidence of deposits of historical or archaeological interest is found, the Contractor shall cease operations affecting the find and shall notify the Owner, who shall notify the Missouri Department of Natural Resources and the Director, Division of Parks & Historical Preservation, P. O. Box 176, 205 Jefferson Street, Jefferson City, MO 65102, phone (573) 751-7858.

B. No further disturbance of the deposits shall ensue until the Contractor has been notified by the Owner that he may proceed. The Owner will issue a notice to proceed only after the state official has surveyed the find and made a determination to the Environmental Protection Agency and the Owner. Compensation to the Contractor, if any, for lost time or changes in construction to avoid the find, shall be determined in accordance with changed conditions or change order provisions of these Specifications.

1.09 COMPLIANCE WITH LAWS

A. The Contractor shall comply with all applicable Federal, State, and local laws and ordinances.

1.10 "OR EQUAL" STATEMENT

A. When a manufacturer's name is used in these Specifications it is used to establish a standard and the words "or equal," if not stated, are implied.

1.11 PAYMENT TO CONTRACTOR

A. The field representative and Contractor shall prepare and submit a monthly pay estimate to the Engineer for approval on or before the twentieth day of each month. Request for payment received after the first day of the month will not be considered. This will ensure that no unnecessary delays in payment to contractors will result.

B. The Engineer will recommend or reject pay estimates within a period of 5 days after receipt of these estimates. The Owner shall pay the contractor the approved amount due within a period of thirty (30) days from the Engineer's approval.

C. If the Owner fails to make payment thirty (30) days after approval by the Engineer, in addition to other remedies available to the contractor, then shall be added to each such payment interest at the maximum legal rate commencing on the first day after said payment is due and continuing until the payment is received by the Contractor. The legal rate of interest shall be as specified in 34.057 RSMo, latest revision.

1.12 CONSTRUCTION SCHEDULE

A. The Contractor shall provide a schedule of construction activities within 30 days after

initiation of construction. This schedule must show anticipated progress and the estimated dollar amount that will be requested each month. This schedule must be periodically updated to ensure accuracy. The schedule shall be revised if a variation of more than 10 percent occurs.

1.13 ONE HUNDRED PERCENT PERFORMANCE AND PAYMENT BOND

A. The Contractor shall provide separate Performance and Payment Bonds, each in the amount of 100 percent of the contract amount.

1.14 GENERAL TRAFFIC CONTROL REQUIREMENTS (ATTACHED SIGNING SHEETS)

A. All signing and traffic control devices shall conform to the "Manual on Traffic Control Devices".

B. The attached detail signing sheet(s) apply to a restricted roadway width caused by the Contractor's construction activities. If construction activity of the Contractor is located off the roadway, then the minimum signing will be required. W 20-1 ROAD WORK AHEAD and G 20-2 END OF ROAD WORK.

C. Extended work areas may require additional signing.

D. A minimum of one lane in each direction must be provided at the end of each work day.

E. All roadways which are closed due to the Contractor's construction activities shall be provided with Detour signing and appropriate barricades.

END OF SECTION

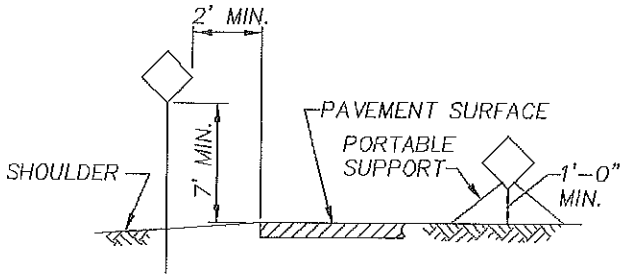

TYPICAL SIGN PLACEMENT

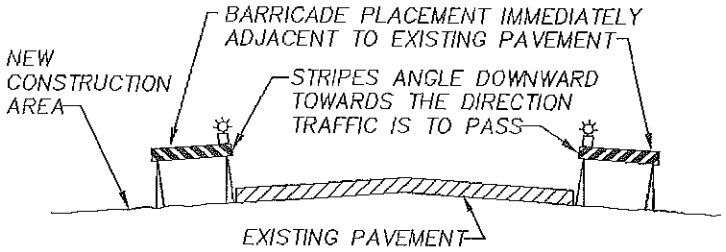

LATERAL PLACEMENT OF CHANNELIZING DEVICES

TYPE	MIN. SIZE	MIN. # LAMPS	USAGE
A	24"x48"	12	LOW SPEED STREETS 25–30 MPH
B	30"x60"	13	INTERMEDIATE SPEED STREETS 35–45 MPH
C	48"x96"	15	HIGH SPEED STREETS 50–55 MPH

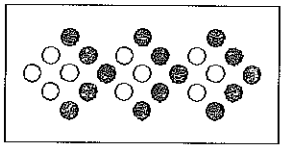

ARROW DISPLAY SHALL BE SET IN THE (LEFT OR RIGHT) SEQUENTIAL CHEVRON MODE FOR LANE CLOSURES.

USE OF A TYPE "C" DISPLAY AT AN "A" OR "B" LOCATION OR USE OF A TYPE "B" DISPLAY AT AN "A" LOCATION IS ALLOWABLE. TYPE "B" DISPLAY MAY BE USED FOR MOVING MAINTENANCE OPERATIONS.

ADVANCE WARNING ARROW DISPLAY

LARKIN GROUP INC.
9200 WARD PARKWAY, SUITE 400
KANSAS CITY, MISSOURI 64114
(816) 361-0440

TITLE LINE #1
TITLE LINE #2
TITLE LINE #3

SHEET_NAME

Date:
Drawn By:
Checked by:
Approved by:
File:
Job#

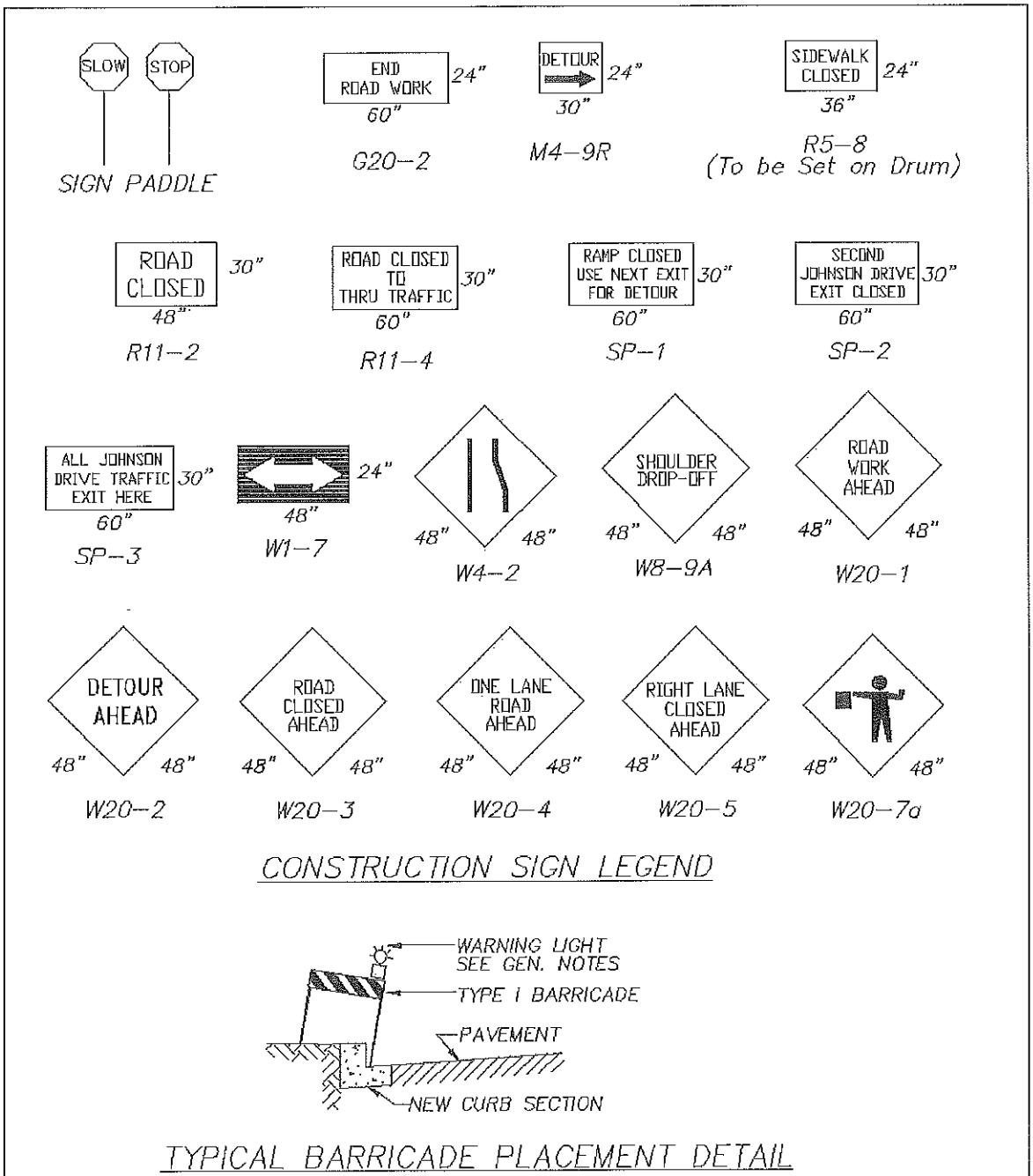
SLOW
STOP
SIGN PADDLE
END ROAD WORK
24"
60"
G20-2
DETOUR
24"
30"
M4-9R
SIDEWALK CLOSED
24"
36"
R5-8
(To be Set on Drum)
ROAD CLOSED
30"
48"
R11-2
ROAD CLOSED TO THRU TRAFFIC
30"
60"
R11-4
RAMP CLOSED USE NEXT EXIT FOR DETOUR
30"
60"
SP-1
SECOND JOHNSON DRIVE EXIT CLOSED
30"
60"
SP-2
ALL JOHNSON DRIVE TRAFFIC EXIT HERE
30"
60"
SP-3
24"
48"
W1-7
48" 48"
W4-2
SHOULDER DROP-OFF
48" 48"
W8-9A
ROAD WORK AHEAD
48" 48"
W20-1
DETOUR AHEAD
48" 48"
W20-2
ROAD CLOSED AHEAD
48" 48"
W20-3
ONE LANE ROAD AHEAD
48" 48"
W20-4
RIGHT LANE CLOSED AHEAD
48" 48"
W20-5
48" 48"
W20-7a
CONSTRUCTION SIGN LEGEND
WARNING LIGHT
SEE GEN. NOTES
TYPE I BARRICADE
PAVEMENT
NEW CURB SECTION
TYPICAL BARRICADE PLACEMENT DETAIL
NEW CURB SECTION
LARKIN GROUP, INC.
9200 WARD PARKWAY, SUITE 400
KANSAS CITY, MISSOURI 64114
(816) 361-0440
TITLE LINE #1
TITLE LINE #2
TITLE LINE #3
SHEET_NAME
Date:
Drawn By:
Checked by:
Approved by:
File:
Job#

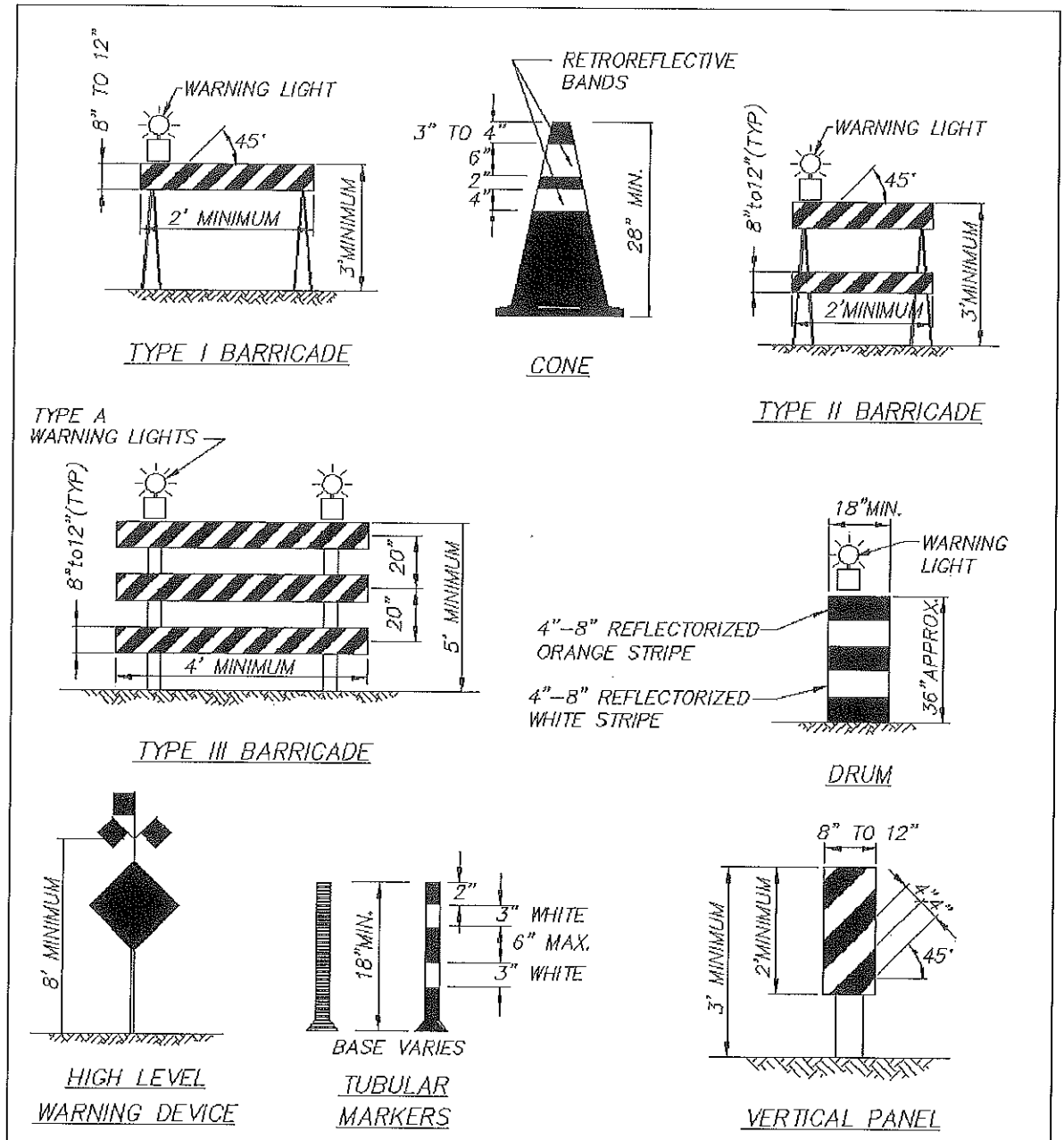

CHANNELIZING DEVICES AND HIGH LEVEL WARNING DEVICES

LARKIN GROUP, Inc.
9200 WARD PARKWAY, SUITE 400
KANSAS CITY, MISSOURI 64114
(816) 361-0440

TITLE LINE #1
TITLE LINE #2
TITLE LINE #3

SHEET_NAME

Date:
Drawn By:
Checked by:
Approved by:
File:
Job#

PART 1 - GENERAL

1.01 SECTION INCLUDES

A. Work covers construction located within the city limits of Peculiar, Missouri or for any work done for the City of Peculiar..

B. Contractor's duties:

1. Except as specifically noted, provide and pay for:
   a. Labor, materials, and equipment.
   b. Tools, construction equipment, and machinery.
   c. Water, heat, and utilities required for construction.
   d. Other facilities and services necessary for proper execution and completion of work.
2. Pay legally required consumer, and use taxes. If Contractor contracts with the City a Missouri Project Exemption Certificate for sales tax will be furnished for the project.
3. Secure and pay for, as necessary for proper execution and completion of work, and as applicable at time of receipt of bids:
   a. Permits.
   b. Government fees.
   c. Licenses.
4. Give required notices.
5. Comply with codes, ordinances, rules, regulations, orders, and other legal requirements of public authorities which bear on performance of work.
6. Promptly submit written notice to Engineer of observed variance of Contract Documents from legal requirements.
   It is Contractor's responsibility to make certain that drawings and specifications comply with codes and regulations.
   a. Appropriate modifications to Contract Documents will adjust necessary changes.
   b. Assume responsibility for work known to be contrary to such requirements, without notice.
7. Enforce strict discipline and good order among employees. Do not employ on work:
   a. Unfit persons.
   b. Persons not skilled in assigned task.
8. Comply with prevailing wage law requirements.
9. Comply with nondiscrimination requirements.
10. Perform all supervision and work necessary to provide safe working conditions for completion of all required excavation and construction work.
11. Verify dimensions indicated on drawings with field dimensions before fabrication or ordering of materials. Do not scale drawings.
12. Notify Owner of existing conditions differing from those indicated on the Drawings. Do not remove or alter structural components without prior written approval.

PART 1 - GENERAL

1.01 SECTION INCLUDES

A. Work covers construction located within the city limits of Peculiar, Missouri or for any work done for the City of Peculiar..

B. Contractor's duties:

1. Except as specifically noted, provide and pay for:
   a. Labor, materials, and equipment.
   b. Tools, construction equipment, and machinery.
   c. Water, heat, and utilities required for construction.
   d. Other facilities and services necessary for proper execution and completion of work.
2. Pay legally required consumer, and use taxes. If Contractor contracts with the City a Missouri Project Exemption Certificate for sales tax will be furnished for the project.
3. Secure and pay for, as necessary for proper execution and completion of work, and as applicable at time of receipt of bids:
   a. Permits.
   b. Government fees.
   c. Licenses.
4. Give required notices.
5. Comply with codes, ordinances, rules, regulations, orders, and other legal requirements of public authorities which bear on performance of work.
6. Promptly submit written notice to Engineer of observed variance of Contract Documents from legal requirements.
   It is Contractor's responsibility to make certain that drawings and specifications comply with codes and regulations.
   a. Appropriate modifications to Contract Documents will adjust necessary changes.
   b. Assume responsibility for work known to be contrary to such requirements, without notice.
7. Enforce strict discipline and good order among employees. Do not employ on work:
   a. Unfit persons.
   b. Persons not skilled in assigned task.
8. Comply with prevailing wage law requirements.
9. Comply with nondiscrimination requirements.
10. Perform all supervision and work necessary to provide safe working conditions for completion of all required excavation and construction work.
11. Verify dimensions indicated on drawings with field dimensions before fabrication or ordering of materials. Do not scale drawings.
12. Notify Owner of existing conditions differing from those indicated on the Drawings. Do not remove or alter structural components without prior written approval.

13. All licenses, permits, certificates, bonds, etc., required in connection with the work to be performed under the provisions of these Contract Documents on highway railroad right-of-way, or special road district right-of-way shall be secured by the Contractor entirely at his own expense.

1.02 CONTRACTOR USE OF PREMISES

A. Confine Operations at site to areas permitted by:
   1. Law.
   2. Ordinances.
   3. Permits.
   4. Contract Documents.
   5. Owner.

B. Do not unreasonably encumber site with materials or equipment.

C. Assume full responsibility for protection and safekeeping of products stored on premises.

D. Move any stored products which interfere with operations of Owner.

E. Obtain and pay for use of additional storage or work areas needed for operations.

F. Use of site.
   Exclusive and complete for execution of work, except:
   1. Contractor shall maintain access to existing facilities.
   2. Owner shall have access to existing facilities.

G. Operation of the existing facilities:
   1. It is essential that the existing facilities be kept in operation during the construction period. Short periods of shutdown will be possible to permit modifications or connections to or tie in with existing facilities. The time period will vary with Owner usage at different times of the day.
   2. In some instances it will be necessary to complete and put new facilities into operation prior to commencing work on existing facilities which would require their removal from service.
   3. Where interruption of existing facilities are necessary, the Contractor is to plan his work in cooperation with facility operating personnel for the least possible disruption of service. Night or weekend work may be necessary. When facility operation must be suspended because of the Contractor's work, he shall have all necessary materials and equipment on hand, and have ample work force available prior to beginning the work.

1.03 POSITION, GRADIENT, AND ALIGNMENT

A. All construction work shall be done to the lines and grades shown on the Plans. The Engineer will establish on the site the required benchmarks and base lines. Detailed survey and staking for location and grade of individual structures or other construction, as well as measurements and elevations within structures, shall be performed by the Contractor.

B. Any work done without being properly located and established by base lines, offset stakes, benchmarks, or other basic reference points, may be ordered removed and replaced at the Contractor's expense.

1.04 PROTECTION AND MAINTENANCE OF PUBLIC AND PRIVATE PROPERTY

A. Protect, shore, brace, support, and maintain all underground pipes, conduits, drains, and other underground construction uncovered or otherwise affected by the construction work performed. All pavement, surfacing, driveways, curbs, walks, buildings, utility poles, guy wires, and other surface structures affected by construction operations in connection with the performance of the Contract shall be restored to the original condition thereof as determined and approved by the Engineer. All replacements of such underground construction and surface structures or parts thereof shall be made with new materials conforming to the requirements of these Specifications or, if not specified, as approved by the Engineer.

B. The Contractor shall be responsible for all damage to streets, roads, highways, railroads, shoulders, ditches, embankments, culverts, bridges, power transmission lines, oil lines, gas lines, or other public or private property or facility, regardless of location or character, which may be caused by moving, hauling, or otherwise transporting equipment, materials, or men to or from the work or any part or site thereof, whether by him or his subcontractor or subcontractors. The Contractor shall make satisfactory and acceptable arrangements with the owner of, or the agency or authority having jurisdiction over, the damaged property or facility concerning its repair or replacement or payment of costs incurred in connection with said damage.

C. The Contractor shall conduct his work so at to interfere as little as possible with public travel, whether vehicular or pedestrian; whenever it is necessary to cross, obstruct, or close roads, driveways, and walks, whether public or private. The Contractor shall, at his own expense, provide and maintain suitable and safe bridges, detours, or other temporary expedients for the accommodation of public and private travel, and shall give reasonable notice to owners of private drives before interfering with them; provided however, that such maintenance of traffic will not be required at any point where the Contractor has obtained permission from the owner and tenant of private property, or from the authority having jurisdiction over the public property involved, to obstruct traffic at any designated point thereon and for the duration of whatever period of time as may be agreed upon.

1.05 INSPECTION BY PUBLIC AGENCIES

A. Authorized representatives of the Engineers and Owner shall have access to the work wherever it is in preparation or progress. The Contractor shall provide proper facilities for such access and inspection.

1.06 CONTRACTOR'S RESPONSIBILITY FOR MATERIALS

A. The Contractor shall be responsible for the condition of all materials furnished by him, and he shall replace at his own cost and expense any and all such material found to be defective in design or manufacture, or which has been damaged after delivery. This includes the furnishing of all materials and labor required for replacement of any installed material which are found to be defective at any time prior to the expiration of 1 year from the date of final payment.

10.7 SITE

A. Necessary easements for construction of water lines under this contract will be provided by the Owner. Information on water construction easement width may be obtained from the Owner. The Contractor shall confine his operations to the site or easement provided, or make other arrangements with the property owner. Any and all cost agreed to between the Contractor and property owners for special arrangements shall be paid by the Contractor and shall not constitute a claim for extra payment.

1.08 PROTECTION OF WATER SUPPLIES

A. Water supply interconnections:
There shall be no physical connection between a public or private potable water supply system and a sewer, or appurtenance thereto which would permit the passage of any sewage or polluted water into the potable supply.

1.09 EXPLANATION OF PROPOSAL

A. The Owner reserves the right to select any or all alternates. The best and lowest bid will be determined by bidder's qualifications and the low total price for the base bid and the alternate bid items selected by the Owner.

B. Bid:
1. The bid includes complete construction of the project, ready for use.
2. Construct work under the unit price or lump sum prices as called for in the Proposal.

C. Contractor guarantees his/her work for a one (1) year period after completion of the project.

1.10 "OR EQUAL" STATEMENT

A. When a manufacturer's name is used in these Specifications it is used to establish a standard and the words "or equal", if not stated, are implied.

PART 2 - PRODUCTS

Not applicable to this section.

PART 3 - EXECUTION

Not applicable to this section.

END OF SECTION

PART 1 - GENERAL

1.01 SECTION INCLUDES

A. Shop Drawings, Product Data, and Samples required by specification sections.

1.02 RELATED SECTIONS

A. Section 01700: Project Closeout

B. Section 01720: Project Record Documents

1.03 SHOP DRAWINGS

A. Original drawings, prepared by Contractor, subcontractor, supplier or distributor, which illustrate some portion of the Work; showing fabrication, layout, setting or erection details.

B. Prepared by a qualified detailer.

C. Identify details by reference to sheet and detail numbers shown on Contract Drawings.

D. Reproductions for submittals:
Opaque diazo prints or blueprints, or blacklines on bond.

1.04 PRODUCT DATA

A. Manufacturer's standard schematic drawings:
1. Modify drawings to delete information which is not applicable to project.
2. Supplement standard information to provide additional information applicable to project.

B. Manufacturer's catalog sheets, brochures, diagrams, schedules, performance charts, illustrations, and other standard descriptive data.
1. Clearly mark each copy to identify pertinent materials, products or models.
2. Show dimensions and clearances required.
3. Show performance characteristics and capacities.
4. Show wiring diagrams and controls.

1.05 CONTRACTOR RESPONSIBILITIES

A. Review Shop Drawings, Product Data, and Samples prior to submission.

B. Verify:
   1. Field measurements.
   2. Field construction criteria.
   3. Catalog numbers and similar data.

C. Coordinate each submittal with requirements of Work and of Contract Documents.

D. Contractor's responsibility for errors and omissions in submittals is not relieved by Engineer's review of submittals.

E. Contractor's responsibility for deviations in submittals from requirements of Contract Documents is not relieved by Engineer's review of submittals, unless the Engineer gives written acceptance of specific deviations.

F. Notify Engineer, in writing at time of submission, of deviations in submittals from requirements of Contract Documents.

G. Begin no work which requires submittals until submittal approval.

H. After Engineer's review, distribute copies.

1.06 SUBMISSION REQUIREMENTS

A. Schedule submissions at least 10 days before dates approved submittals will be needed.

B. Submit number of copies of Shop Drawings, Product Data, and Samples which Contractor requires for distribution plus three copies which will be retained by the Engineer.

C. Submit number of Samples specified in each of Specification sections.

D. Accompany submittals with transmittal letter, in duplicate, containing:
   1. Date.
   2. Project title and number.
   3. Contractor's name and address.
   4. The number of each Shop Drawing, Product Data, and Sample submitted.
   5. Notification of deviations from Contract Documents.
   6. Other pertinent data.

E. Submittals shall include:
   1. Date and revision dates.
   2. Project title and number.
   3. The names of:
      a. Engineer.
      b. Contractor.
      c. Subcontractor.
      d. Supplier.

e. Manufacturer.
f. Separate detailer when pertinent.

4. Identification of product or material.
5. Relation to adjacent structure or materials.
6. Field dimensions, clearly identified.
7. Specification section number.
8. Applicable standards, such as ASTM number or Federal Specification.
9. A blank space, 3 inches by 5 inches, for the Engineer's stamp.
10. Identification of deviations from Contract Documents.
11. Contractor's stamp, initialed or signed, certifying to review of submittal, verification of field measurements and compliance with Contract Documents.

1.07 RESUBMISSION REQUIREMENTS

A. Shop Drawings:
1. Revise initial drawings as required and resubmit as specified for initial submittal.
2. Indicate on drawings any changes which have been made other than those requested by Engineer.
3. Product Data and Samples:
Submit new data and samples as required for initial submittal.

1.08 DISTRIBUTION OF SUBMITTALS AFTER REVIEW

A. Distribute copies of Shop Drawings and Product Data which carry Engineer's stamp, to:
1. Contractor's file.
2. Job-site file.
3. Record Documents file.
4. Subcontractors.
5. Supplier.
6. Fabricator.

B. Distribute samples as directed.

1.09 ENGINEER'S DUTIES

A. Review submittals with reasonable promptness.

B. Review for:
1. Design concept of project.
2. Information given in Contract Documents.

C. Review of separate item does not constitute review of an assembly in which item functions.

D. Affix stamp and initials or signature indicating review of submittal.

E. Return submittals to Contractor for distribution.

END OF SECTION

PART 1 - GENERAL

1.01 SECTION INCLUDES:

A. Substitutions and product options.

1.02 RELATED SECTIONS

A. Section 01340: Shop Drawings, Product Data, and Samples.

1.03 PRODUCTS LIST

A. Within 30 days after date of Contract, submit to Engineer 5 copies of complete list of all products which are proposed for installation.

B. Tabulate list by each Specification section.

C. For products specified under reference standards, include with listing of each product:
   1. Name and address of manufacturer.
   2. Trade name.
   3. Model or catalog designation.
   4. Manufacturer's data:
      a. Performance and test data.
      b. Reference standards.

1.04 CONTRACTOR'S OPTIONS

A. For products specified only by reference standards, manufacturer shall submit data for approval 10 days prior to bid date.

B. For products specified by naming several products or manufacturers, select any product and manufacturer named.

C. For products specified by naming one product, Contractor must submit a request, as required for substitution, for any product not specifically named.

1.05 SUBSTITUTIONS

A. During bidding, Engineer will consider written requests from prime Bidders for substitutions, received at least 10 days prior to bid date; requests received after that time will not be considered.

B. Submit five copies of request for substitution. Include in request:
   1. Complete data substantiating compliance of proposed substitution with Contract Documents.
   2. For products:
      a. Product identification, including manufacturer's name and address.
      b. Manufacturer's literature.
         (1) Product description.
         (2) Performance and test data.
         (3) Reference standards.
      c. Samples.
      d. Name and address of similar projects on which product was used, and date of installation.
   3. For construction methods:
      a. Detailed description of proposed method.
      b. Drawings illustrating methods.
   4. Itemized comparison of proposed substitution with product or method specified.
   5. Data relating to changes in construction schedule.
   6. Relation to separate contracts.

C. In making request for substitution, Bidder represents:
   1. He has personally investigated proposed product or method, and determined that it is equal or superior in all respects to that specified.
   2. He shall provide the same guarantee for substitution as for product or method specified.
   3. He shall coordinate installation of accepted substitution into work, making such changes as may be required for work to be complete in all respects.
   4. He waives all claims for additional costs related to substitution which consequently becomes apparent.
   5. Cost data is complete and includes all related costs under his contract, but excludes:
      a. Costs under separate contracts.
      b. Engineer's redesign.

D. Substitutions will not be considered if:
   1. They are indicated or implied on Shop Drawings or Project Data submittals without formal requests submitted in accord with Paragraph 1.04.
   2. Acceptance will require substantial revision of Contract Documents.

E. Engineer will notify Bidders of all approved substitutions by Addendum listing manufacturers of each item.

END OF SECTION

PART 1 - GENERAL

1.01 SECTION INCLUDES

A. Administrative procedures, closeout submittals, and forms to be used at substantial completion and at final completion of the Work.

1.02 RELATED SECTIONS

A. Section 01710: Cleanup

B. Section 01720: Project Record Documents

1.03 SUBSTANTIAL COMPLETION

A. Contractor:
   1. Submit written certification to the Engineer, that project, or designated portion of project, is substantially complete.
   2. Submit list of major items to be completed or corrected.

B. Engineer will make an inspection within 7 days after receipt of certification, together with Owner's representative.

C. Should the Engineer consider that work is substantially complete:
   1. Contractor shall prepare and submit a list of items to be completed or corrected, as determined by the inspection.
   2. Engineer will prepare and issue a Letter of Substantial Completion, containing:
      a. Date of substantial completion.
      b. Contractor's list of items to be completed or corrected, verified, and amended.
      c. The time within which Contractor shall complete or correct work of listed items.
      d. Time and date Owner will assume possession of Work or designated portion thereof.
      e. Responsibilities of Owner and Contractor for:
         (1) Utilities.
         (2) Operation of mechanical, electrical, and other systems.
         (3) Maintenance and cleaning.
         (4) Security.
      f. Signatures of:
         (1) Contractor.
         (2) Owner.
         (3) Engineer.

3. Owner occupancy of Project or designated portion of Project.
   a. Contractor shall:
      (1) Obtain certificate of occupancy.
      (2) Perform final cleaning in accordance with Section 01710.
   b. Owner will occupy Project, under provisions stated in Certificate of Substantial Completion.
4. Contractor:
   Complete work listed for completion or correction within designated time.

D. Should the Engineer consider that work is not substantially complete:
   1. They shall immediately notify Contractor, in writing, stating reasons.
   2. Contractor:
      Complete work and send second written notice to the Engineer, certifying that Project or designated portion of Project, is substantially complete.
   3. Engineer will review work.

1.04 FINAL PROJECT REVIEW

A. Contractor shall submit written certification that:
   1. Contract Documents have been reviewed.
   2. Project has been reviewed for compliance with Contract Documents.
   3. Work has been completed in accordance with Contract Documents.
   4. Equipment and systems have been tested in presence of Owner's representative and are operational.
   5. Project is completed, and ready for final review.

B. Engineer will make final project review within seven days after receipt of certification.

C. Should the Engineer consider that work is finally complete in accordance with requirements of Contract Documents, the Project will be closed out.

D. Should the Engineer consider that work is not finally complete:
   1. They will notify Contractor, in writing, stating reasons.
   2. Contractor shall take immediate steps to remedy the stated deficiencies, and send second written notice to the Engineer certifying that work is complete.
   3. Engineer will review work.

1.05 CLOSEOUT SUBMITTALS

A. Project record documents:
   To requirements of Section 01720.

B Deliver evidence of compliance with requirements of governing authorities.

C. Deliver Certificate of Insurance for products and completed operations.

1.06 EVIDENCE OF PAYMENTS AND RELEASE OF LIENS

A. Contractor's affidavit of payment of debts and claims.

B. Contractor's affidavit of release of liens, with:
   1. Consent of surety of final payment.
   2. Contractor's release of waiver of liens.
   3. Separate releases of waivers of liens for subcontractors, suppliers, and others with lien rights against property of Owner, together with list of those parties.

C. All submittals shall be duly executed before delivery.

1.07 INSTRUCTION

A. Instruct Owner's personnel in operation of all systems, mechanical, electrical, and other equipment.

1.08 FINAL ADJUSTMENT OF ACCOUNTS

A. Submit final statement of accounting to Engineer.

B. Statement shall reflect all adjustments.
   1. Original Contract Sum.
   2. Additions and deductions resulting from:
      a. Previous Change Orders.
      b. Cash Allowances.
      c. Other Adjustments.
      d. Deductions for uncorrected Work.
      e. Deductions for liquidated damages.
      f. Deductions for Reinspection Payments.
   3. Total Contract Sum, as adjusted.
   4. Previous payments.
   5. Sum remaining due.

C. Engineer will prepare final Change Order, reflecting approved adjustments to Contract Sum not previously made by Change Orders.

1.09 FINAL APPLICATION FOR PAYMENT

A. Contractor shall submit final application in accordance with requirements of Regulations of the Contract.

1.10 FINAL CERTIFICATE FOR PAYMENT

A. Engineer will issue final certificate in accordance with provisions of Regulations of the Contract.

B. Should final completion be materially delayed through no fault of Contractor, Engineer may issue, for Owner's approval, a Semi-Final Certificate for Payment, in accordance with provisions of Regulations of the Contract.

1.11 POST-CONSTRUCTION PROJECT REVIEW

A. Prior to expiration of 1 year from Date of Substantial Completion, the Owner may request a visual review of Project in company with Engineer and Contractor to determine whether correction of Work is required, in accordance with provisions of Regulations of the Contract. The Contractor shall be present for the review and be ready to promptly correct any noted deficiencies. The Contractor will also provide equipment as necessary to facilitate this review.

B. The Engineer will promptly notify Contractor, in writing, of any observed deficiencies.

END OF SECTION

PART 1 - GENERAL

1.01 SECTION INCLUDES

A. Project cleanup.

1.02 RELATED SECTIONS

A. Section 01700: Project Closeout

B. Cleaning for Specific Products or Work: Specification Section for that work.

1.03 SAFETY REQUIREMENTS

A. Hazards Control:
1. Store volatile wastes in covered metal containers, and remove from premises daily.
2. Prevent accumulation of wastes which create hazardous conditions.
3. Provide adequate ventilation during use of volatile or noxious substances.

B. Conduct cleaning and disposal operations to comply with local ordinances and anti-pollution laws.
1. Do not burn or bury rubbish and waste materials on project site.
2. Do not dispose of volatile wastes such as mineral spirits, oil, or paint thinner in storm or sanitary drains.
3. Do not dispose of wastes into streams or waterways.

PART 2 - PRODUCTS

2.01 MATERIALS

A. Use only cleaning materials recommended by manufacturer of surface to be cleaned.

B. Use cleaning materials only on surfaces recommended by cleaning material manufacturer.

PART 3 - EXECUTION

3.01 GENERAL

A. Maintain premises and public properties free from accumulations of waste, debris, and rubbish caused by operations.

B. At completion of Work, remove waste materials, rubbish, tools, equipment, machinery, and surplus materials, and clean all sight-exposed surfaces; leave project clean and ready for occupancy.

3.02 DURING CONSTRUCTION

A. Execute cleaning to ensure that building, grounds, and public properties are maintained free from accumulations of waste materials and rubbish.

B. Wet down dry materials and rubbish to lay dust and prevent blowing dust.

C. At reasonable intervals during progress of Work, clean site and public properties, and dispose of waste materials, debris, and rubbish.

D. Provide on-site dump containers for collection of waste materials, debris, and rubbish.

E. Remove waste materials, debris and rubbish from site and legally dispose of at public or private dumping areas off Owner's property.

F. Handle materials in a controlled manner with as few handlings as possible; do not drop or throw materials from heights.

G. Remove from the Owner's property and from all public and private property, at Contractor's expense, all temporary structures, rubbish, excess excavation, and waste material resulting from his operations.

H. Clean all dirt from paved surfaces, not allowing same to pack on the roadway or to create a traffic nuisance. Insofar as practicable, clean all dirt from gravel and oil aggregate surfaces.

I. All existing sod areas shall be hand raked to remove earth deposited on or in them during construction.

J. All ditches shall be graded and properly sloped.

K. Shoulders where sodding, seeding, or surfacing is not required shall be bladed and shaped.

3.03 FINAL CLEANING

A. Employ experienced workmen, or professional cleaners, for final cleaning.

B. Broom clean paved surfaces; rake clean other surfaces of grounds.

END OF SECTION

PART 1 - GENERAL

1.01 SECTION INCLUDES

A. Record documents.

1.02 RELATED SECTIONS

A. Section 01340: Shop Drawings, Project Data, and Samples

1.03 MAINTENANCE OF DOCUMENTS

A. Maintain at job site, one copy of:
   1. Contract Drawings.
   2. Specifications.
   3. Addenda.
   4. Reviewed Shop Drawings.
   5. Change Orders.
   6. Other Modifications to Contract.
   7. Field Test Records.

B. Maintain documents in clean, dry, legible condition.

C. Do not use record documents for construction purposes.

D. Make documents available at all times for inspection by Engineer, appropriate State and Federal Regulatory Agencies, and Owner.

E. Store documents iu temporary field office apart from documents used for construction.

F. Provide files and racks for storage of documents.

G. File documents in accordance with Project Filing Format of Uniform Construction Index.

1.04 RECORDING

A. Label each documeut "PROJECT RECORD" in 2 inch high printed letters.

B. Keep record documents current.

C. Do not permanently conceal any work until required information has been recorded.

D. Contract Drawings: Legibly mark to record actual construction:

1. Depths of various elements of sewer pipe and manholes in relation to survey datum.
2. Horizontal and vertical location of underground utilities and appurtenances referenced to permanent surface improvements.
3. Location of internal utilities and appurtenances concealed in construction referenced to visible and accessible features of structure.
4. Field changes of dimension and detail.
5. Changes made by Change Order or Field Order.
6. Details not on original contract drawings.

E. Specifications and Addenda: Legibly mark up each section to record:
1. Manufacturer, trade name, catalog number, and Snpplier of each product and item of equipment actually installed.
2. Changes made by Change Order or Field Order.
3. Other matters not originally specified.

F. Shop Drawings: Maintain as record documents; legibly annotate following drawings to record changes made after review.
1. Electrical controls.
2. Equipment.
3. Structural.
4. Mechanical.

1.05 SUBMITTAL

A. At completion of project, deliver record documents to the Engineer.

B. Accompany submittal with transmittal letter, in duplicate, containing:
1. Date.
2. Project title and number.
3. Contractor's name and address.
4. Title and number of each record document.
5. Certification that each document as submitted is complete and accurate.
6. Signature of Contractor, or his authorized representative.

END OF SECTION

PART 1 - GENERAL

1.01 DESCRIPTION

A. An investigation of subsoil has not been made for this project. Ground water and rock may be encountered in excavations. Depth of ground water may vary seasonally.

1.02 ADDITIONAL INFORMATION

A. The Contractor should visit the site and acquaint himself with all existing conditions. Prior to bidding, bidders may make their own subsurface investigations to satisfy themselves as to site and subsurface conditions but such subsurface investigations shall be performed only under time schedules and arrangements approved in advance by the Owner. Such exploratory excavation shall be made in a manner and location that will not disturb piping or other buried utilities or facilities.

B. The Contractor shall satisfy himself as to the nature of the material to be excavated and the amount of rock or water to be handled. The Contractor shall include in his unit prices bid all costs in connection with excavation, dewatering and difficulties encountered and shall assume full risk in the matter.

END OF SECTION

PART 1 - GENERAL

1.01 SECTION INCLUDES

A. Trenching and Trench Backfilling.

B. Pipe embedment.

1.02 RELATED SECTIONS

A. Section 02010: Subsurface Conditions

B. Section 02226: Bored Excavation

PART 2 - PRODUCTS

2.01 FILL AND PIPE EMBEDMENT MATERIAL

A. Embedment material:

1. Material shall be clean river gravel or sound crushed limestone, free of cementitious, shaly or flat and flaky particles in an amount which would cause the material to cake or pack or otherwise form an unyielding support for the pipe. Gradation shall be:

3/4"	square mesh sieve -	100% passing
1/2"	square mesh sieve -	90-100% passing
No. 4	square mesh sieve -	0-15% passing
No. 8	square mesh sieve -	0-5% passing

2. Where bedding rock is not required, bedding material shall be same as fill material.

B. Fill material:
Backfill material shall be selected earth or granular fill material, free from sod, sticks and roots over 1/2 inch in diameter, and free from hard lumps, clods or rock in such quantity or concentration as to interfere with the specified compaction. Material shall be of proper moisture content for specified compaction.

PART 3 - EXECUTION

3.01 GENERAL

A. Trenching work shall be performed in a safe and proper manner, with suitable precautions being taken against hazards of every kind. Trenching shall provide adequate working space and clearances for the work to be performed therein.

B. Trenching and backfilling during freezing weather shall not be done except by permission of the Engineer. No backfill materials shall be installed on frozen surfaces nor shall frozen materials, snow or ice be placed in any backfill.

C. When operating on pavements or walks all equipment shall be rubber tired, except for excavation equipment. Excavating equipment, in such cases, shall not have grousers, cleats or lugs on the tracks. The Contractor shall take all precautions necessary to protect the existing pavements and walks.

D. No classification of excavated materials will be made. Trenching and trenching work shall include the removal and subsequent handling of all materials excavated or otherwise removed in performance of the contract work, regardless of the type, character, composition or condition thereof.

E. Pipe lines and other existing underground installations and structures in the vicinity of the work to be done hereunder are not indicated on the Plans. The Contractor shall make every effort to locate all underground pipe lines, conduits and structures by contacting Owners of underground utilities and by prospecting in advance of trench excavation. Damage to any existing underground installation caused by the Contractor's operation shall be repaired at the Contractor's expense.

F. Any delays or extra cost to the Contractor caused by pipe lines or other underground structures or obstructions not shown by the Plans, or found in locations different than those indicated, shall not constitute a claim for extra work, additional payment or damages.

G. Erosion control of disturbed areas will be required during the construction period through the use of check dams, siltation pools, mulching, etc.

H. Operation:
   1. Use all means necessary to control dust or mud that may interfere with operation.
   2. Maintain all streets and driveways free of dirt and materials from Contractor's operation.

I. Protection:
   1. Use all means necessary to protect material and preserve Specification requirements.
   2. Replace all damaged material or material that has lost Specification requirements.

3.02 TRENCH EXCAVATION

A. General:

1. The Contractor shall not open more trench in advance of pipe laying than is necessary to expedite the work. One block or 400 feet (whichever is the shorter) shall be the maximum length of open trench permitted on any line under construction.
2. Except where tunneling is permitted by the Engineer or called for on the Plans, all trench excavation shall be open cut from the surface.
3. Trench walls shall be vertical, and braced where necessary, in streets or improved area unless otherwise authorized by Engineer.

B. Alignment and grade:

1. Water lines:
   Trenches shall be carefully excavated so that the minimum cover over top of pipe will be 42 inches to existing street or ground surface, or to future surface when indicated. Greater cover at some locations along the line may be required due to street or ground profile and clearance of culverts, structures, utility lines, etc.

C. Minimum trench widths and pipe clearances:

1. Trenches shall be excavated to a width which will provide adequate working space and pipe clearances for proper pipe installation, jointing and embedment.
2. Below an elevation of 12 inches from ground level to the top of the installed pipe, the trench width shall be maintained as narrow as possible.
3. Where necessary to reduce the earth load on trench banks to prevent sliding and caving, the banks may be cut back on slopes which shall not extend lower than 1 foot above the top of the pipe.

D. Mechanical excavation:

1. The use of mechanical equipment will not be permitted in locations where its operation would cause damage to buildings, culverts, or other existing property, utilities, or structures above or below ground; in all such locations, hand excavating tools and methods shall be used.
2. Mechanical equipment used for trench excavation shall be of a type, design and construction and shall be so operated, that the rough trench excavation bottom elevation can be controlled, that uniform trench widths and vertical side walls are obtained at least from an elevation 1 foot above the top of the installed pipe to the bottom of the trench, and that the trench alignment is such that the pipe when accurately laid to specified alignment will be centered in the trench with adequate clearance between the pipe and side walls of the trench. Undercutting of the trench side wall to obtain clearance will not be permitted.

E. Bell holes:

Bell holes shall provide adequate clearance for the tools and methods used in installing the pipe. No part of any bell or coupling shall be in contact with the trench bottom, trench walls, or the granular fill when the pipe is jointed.

F. Cutting concrete pavement and walks:

1. Cuts in concrete and asphalt pavements shall be no larger than necessary to provide adequate working space for proper installation of pipe and pipe line appurtenances. Cutting shall be started with a concrete saw (or by other cutting method approved by the Engineer) and in a manner which will provide a clean groove at least 1-1/2 inches deep along each side of the trench and along the perimeter of cuts for structures.
2. Pavement and base pavement over trenches excavated for pipe lines shall be removed so that a shoulder not less than 6 inches in width at any point is left between the cut edge of the pavement and the top edge of the trench. The trench width at the bottom shall not be greater than at the top and no undercutting will be permitted. Pavement cuts shall be made to and between straight or accurately marked curved lines which, unless otherwise required, shall be parallel to the center line of the trench.

3.03 SHEETING AND SHORING

A. Except where banks may be cut back on a stable slope, excavation for trenches shall be properly and substantially sheeted, braced and shored, as necessary, to prevent caving or sliding, to provide protection for the workmen and the work, and to provide protection for existing structures and facilities. Sheeting, bracing and shoring shall be designed and built to withstand all loads that might be caused by earth movement or pressure, and shall be rigid, maintaining its shape and position under all circumstances.

3.04 STABILIZATION

A. General:

1. Trench bottoms shall be firm, dense and thoroughly compacted and consolidated; shall be free from mud and muck; and shall be sufficiently stable to remain firm and intact under the feet of the workmen.
2. Trench bottoms which are otherwise solid, but which become mucky on top due to construction operations, shall be reinforced with one or more layers of granular fill material or other crushed stone or gravel embedded therein. Not more than 1/2 inch depth of mud or muck shall be allowed to remain on stabilized trench bottoms when the pipe bedding material is placed thereon. The finished elevation of stabilized subgrades for concrete structures shall not be above the subgrade elevations.
3. All stabilization work hereunder shall be performed by and at the expense of the Contractor.
4. If the subgrade for pipe can be stabilized with a thickness of granular fill of 12 inches or less below bottom of pipe, or subgrade of structure, such stabilization will be at the Contractor's expense.

3.05 BLASTING

A. Blasting will not be allowed.

3.06 REMOVAL OF WATER

A. The Contractor shall provide and maintain adequate dewatering equipment to remove and dispose of all surface and ground water entering excavations, trenches, or other part of the work. Each excavation shall be kept dry during subgrade preparation and continually thereafter until the structure to be built, or the pipe line to be installed, therein is completed to the extent that no damage from hydrostatic pressure, flotation, or other causes will result.

3.07 PIPE EMBEDMENT

A. General:

1. Place pipe embedment material on a suitably prepared subgrade in lifts not exceeding 6 inches and bring up evenly on both sides of pipe. Do not dump over side of trench in any manner that will bring earth into the embedment material or displace the pipe. Compact, vibrate, or slice with a shovel, in such manner that material fill will take its final compaction and provide uniform and solid bearing under the pipe and its haunches.

B. Water line pipe bedding

1. Where rock has been excavated, selected earth or granular material shall be placed under the sides and around the pipe to a point 6 inches above the top of the pipe. Embedment material shall be deposited simultaneously on each side of the pipe to prevent lateral displacement of the pipe.
2. When not in rock excavation, all buried pipe shall be installed under Laying Condition Type 2 as described in AWWA C150/A21.50, latest edition. This condition calls for flat-bottom trench with backfill lightly consolidated to the centerline of the pipe.

3.08 TRENCH BACKFILL COMPACTION

A. General:

All trench backfill above pipe embedment shall conform to one of the following Specifications:

1. All County and City gravel surface roads shall be backfilled entirely with approved crushed rock or river gravel. The disposal of unsuitable material excavated will be the responsibility of the Contractor.
2. Ninety percent compacted backfill. Under streets, drives or state or county highways surfaced with gravel, crushed stone, "blacktop" or other low or intermediate type surfacing. In street, road, highway, railway or alley rights-of-way. In traveled ways. In established lawns. Any line within 5 feet of back of

curb or 5 feet of street surfacing if no curb, either perpendicular to or parallel to the street shall be considered as under the street surfacing, and 90 percent compaction shall apply.

3. Ninety-five percent compacted backfill. Under concrete, asphaltic concrete, brick, concrete structures or other high type pavements. Under concrete walks, curbs, gutters and culverts. Under all types of street surfacing where trench cut is approximately at right angle to roadway.
4. In areas not listed above, backfill shall be compacted to equal to the surrounding ground.
5. Six inches of topsoil shall be placed in the top of trenches that are to be covered with sod or to be seeded.
6. If specified density cannot be obtained with available earth, the Contractor shall furnish and haul granular fill material or suitable earth at his expense. Unsuitable earth shall be disposed of at the Contractor's expense.
7. The Engineer will call for density tests to be made whenever deemed necessary. The specified density will be the minimum allowed and the obtainment thereof will be entirely the Contractor's responsibility.
8. Thickness of backfill layers will be determined by the coordination of test results with field performance and equipment used. The Contractor will be expected to maintain established procedures except where unusual conditions arise. If greater than 12 inch thick compacted layers are used, the Contractor shall hand excavate to the test level as directed by the Engineer and then refill the test excavation with compacted backfill to the specified density.
9. All completed lines shall be returned, in the opinion of the Engineer, as nearly as possible to original condition, including reseeding, resodding or repaving.

3.09 DRAINAGE MAINTENANCE

A. Trenches across roadways, driveways, walks, or other trafficways adjacent to drainage ditches or water courses shall not be backfilled prior to completion of backfilling the trench on the upstream side of the trafficway, to prevent impounding water after the pipe has been laid. Bridges and other temporary structures required to maintain traffic across such unfilled trenches shall be constructed and maintained by the Contractor. Backfilling shall be done so that water will not accumulate in unfilled or partially filled trenches. All material deposited in roadway ditches or other water courses crossed by the line of trench shall be removed immediately after backfilling is completed and the section, grades, and contours of ditches or water courses shall be restored to their original condition. Surface drainage shall not be obstructed longer than necessary.

3.10 FINAL GRADING AND DISPOSAL OF EXCESS EXCAVATED MATERIALS

A. General:

1. Except as otherwise indicated, all excess excavated materials shall be disposed of by the Contractor away from the site of the work.

2. Pavement and pavement base material, excavated rock in excess of the amount permitted to be and actually installed in trench backfill, junk and debris encountered in excavation work, and other similar waste materials shall be disposed of away from the site of the work.
3. The disposal of waste and excess excavated materials, including hauling, handling, leveling and surfacing, shall be at the Contractor's expense.

B. Excess backfill:
The Contractor shall dispose of excess excavated material above the surface of the ground or subgrade of pavement walks, etc., unless otherwise directed. If directed, he shall grade excess earth into adjacent low areas, fine grading and sloping to drain.

C. Final grading:
1. Just prior to completion and acceptance of the project, the Contractor shall final grade over all pipe trenches and around structures, filling in any places that may have settled during the period between construction of each line and the completion of the entire Contract. Finished surface shall be bladed and aligned to a neat and uniform appearance.
2. Improved yards and lawns:
Fine grade, suitable for seeding or sodding. Hand rake earth off grass in established lawn areas, unless directed to leave excess earth as outlined above.

D. Deficiency of backfill:
Wherever there is a deficiency of material required to backfill to the specified surface or subgrade, the Contractor shall furnish the necessary amount of suitable earth at his expense.

E. Restoration of disturbed earth:
The Contractor shall restore all earth areas disturbed from the original condition by his operations. Restoration will be by seeding, fertilizing and mulching or by appropriate pavement and street repair.

3.11 RESPONSIBILITY OF CONTRACTOR FOR BACKFILL SETTLEMENT

A. The Contractor shall be responsible financially and otherwise, for:
1. All settlement of trench and other backfill which may occur from time of original backfilling until the expiration of 1 year after the date of final payment for the entire contract under which the backfilling work was performed.
2. The refilling and repair of all backfill settlement and the repair or replacement to the original or a better condition of all pavement, top surfacings, driveways, walks, surface structures, utilities, drainage facilities and sod which may have been damaged as a result of backfill settlement or which have been removed or destroyed in connection with backfill replacement operations.
3. All damage claims or court actions against the Owner for any damage directly or indirectly caused by backfill settlement.

B. The Contractor shall make all necessary backfill replacements and repairs, or replacements appurtenant thereto, within 30 days after notification by the Owner or Engineer. Upon the

Contractor's failure to do so, the Owner may do, or have done, the necessary work and charge the cost to the Contractor.

3.12 BARRICADES AND LIGHTS

A. All streets, roads, highways and other public thoroughfares which are closed to traffic shall be protected by means of effective barricades on which shall be placed acceptable warning signs. Barricades shall be located at the nearest intersecting public highway or street on each side of the blocked section.

B. All open trenches and other excavations shall be provided with suitable barriers, signs, and lights to the extent that adequate protection is provided to the public. Obstructions such as material piles and equipment, shall be provided with similar warning signs and lights.

C. All barricades and obstructions shall be illuminated by means of warning lights at night. All lights used for this purpose shall be kept on from sunset to sunrise. Materials stored shall be so placed, and the work at all times shall be so conducted, as to cause the minimum obstruction and inconvenience to the public.

D. All barricades, signs, lights and other protective devices shall be installed and maintained in conformity with applicable statutory requirements, and where within highway rights-of-way, as required by the authority having jurisdiction hereover.

3.13 MAINTENANCE OF TRAFFIC

A. The Contractor shall conduct his work so as to interfere as little as possible with public travel, whether vehicular or pedestrian; whenever it is necessary to cross, obstruct, or close roads, driveways, and walks, whether public or private, the Contractor shall at his own expense provide and maintain suitable and safe bridges, detours, or other temporary expedients for the accommodation of public and private travel, and shall give reasonable notice to Owners of private drives before interfering with them; provided however, that such maintenance of traffic will not be required at any point where the Contractor has obtained permission from the Owner and tenant of private property, or from the authority having jurisdiction over the public property involved, to obstruct traffic at any designated point thereon and for the duration of whatever period of time as may be agreed upon.

3.14 CROSSING

A. Highway crossings - main:
Crossings of pavements controlled by the State shall include all labor, tools, machines, and materials required for a complete installation to the satisfaction of the District Highway Engineer. This shall include all excavation, boring, steel casing, and compaction of backfill as required. Installation and safety policies required by the State shall be strictly adhered to.

B. Street crossing - bored:
Crossings designated as Street Crossings on the Plans shall include all labor, tools, and materials necessary for a complete installation. This includes all excavation, boring, steel casing, compaction of the backfill and repair of pavement. Where street pavements are on State Highway right-of-way, requirements of the State shall be strictly adhered to.

C. Street crossings - open cut:
Crossing shall include all materials, labor, and tools necessary for a complete crossing and repair of the street. This will include pavement removal, trenching, disposal of excess material, crushed rock backfill, replacement of pavement, casing pipe and all other necessary items.

END OF SECTION

PART 1 - GENERAL

1.01 SECTION INCLUDES

A. Directional Boring under highways, roads, railroads and other obstruction.

1.02 RELATED SECTIONS

A. Section 02010: Subsurface Conditions

B. Section 02221: Trenching, Backfilling and Compaction

1.03 SUPERVISION AND QUALITY

A. This work shall comply with all codes governing and all insurance requirements. Work shall be undertaken only when the construction superintendent is present and supervising the work.

1.04 REQUIREMENTS OF REGULATORY AGENCIES

A. Crossings shall be completed in accordance with applicable federal, state and local regulations.

1.05 SUBMITTALS

A. Work Plan:
Prior to beginning work, the Contractor must submit to the Engineer a general work plan outlining the procedure and schedule to be used to execute the project. Plan should document the thoughtful planning required to successfully complete the project.

B. Equipment:
Contractor will submit specifications on directional boring equipment to be used to ensure that the equipment will be adequate to complete the project. Spares inventory shall be included.

C. Material:
Specifications on material to be used shall be submitted to Engineer. Material shall include the pipe, fittings and any other item which is to be an installed component of the project.

D. Personnel:
Documentation of training and relevant experience of personnel shall be submitted.

PART 2 - PRODUCTS

2.01 CARRIER PIPE

A. Carrier pipe shall be as shown on the plans and called for on the Bid Form.

2.02 BORING SYSTEM

A. Boring Rig:
The directional boring machine shall consist of a hydraulically powered system to rotate, push and pull hollow drill pipe into the ground at a variable angle while delivering a pressurized fluid mixture to a guidable drill (bore) head. The machine shall be anchored to the ground to withstand the pulling, pushing and rotating pressure required to complete the crossing. The hydraulic power system shall be self-contained with sufficient pressure and volume to power boring operations. Hydraulic system shall be free of leaks. Rig shall have a system to monitor and record maximum pull-back pressure during pull-back operations. The rig shall be grounded during boring and pull-back operations. Sufficient spares shall be kept on hand for any break-downs which can be reasonably anticipated.

B. Bore Head:
The bore head shall be steerable by changing its rotation and shall provide the necessary cutting surfaces and boring fluid jets.

2.03 GUIDANCE SYSTEM

A. The Guidance System shall be of a proven type and shall be setup and operated by personnel trained and experienced with this system. The Operator shall be aware of any magnetic anomalies and shall consider such influences in the operation of the guidance system if using a magnetic system.

2.04 BORING FLUID (MUD) SYSTEM

A. Mixing System:
A self-contained, closed, boring fluid mixing system shall be of sufficient size to mix and deliver boring fluid composed of bentonite clay, potable water and appropriate additives. Mixing system shall be able to molecularly shear individual bentonite particles from the dry powder to avoid clumping and ensure thorough mixing. Mixing system shall continually agitate the boring fluid during boring operations.

B. Boring Fluids:
Drilling fluid shall be composed of clean water and an appropriate additive.
Water shall be from a clean source with a pH of 8.5 - 10. Water of a lower pH or with excessive calcium shall be treated with the appropriate amount of sodium carbonate or equal. The water and additives shall be mixed thoroughly and be absent of any clumps or clods. No hazardous additives may be used. Boring fluid shall be maintained at a viscosity sufficient to suspend cuttings and maintain the integrity of bore wall.

2.05 OTHER EQUIPMENT

A. Pipe Rollers:
Pipe rollers, if required, shall be of sufficient size to fully support the weight of the pipe while being hydro-tested and during pull-back operations. Sufficient number of rollers shall used to prevent excess sagging of pipe.

B. Pipe Rammers/Pullers:
Hydraulic or pneumatic pipe rammers or pullers may only be used if necessary and with the authorization of Engineer.

PART 3 - EXECUTION

3.01 GENERAL

A. The depths and locations of bore and receiving pits (working pits) shall be established by the Contractor in accordance with the horizontal alignment and grade as shown on the project construction plans.

B. The working pits shall adhere to OSHA requirements. Barricades shall be furnished around working pits to safeguard traffics and pedestrians.

C. All discharge from dewatering of the working pits shall be directed into approved receiving basins in accordance with all applicable regulatory requirements.

D. The working pits shall be in locations that in no way interfere with the operation of highways, streets, driveways, railroads or other facilities. Working pits shall not weaken or damage any embankment, utility or structure.

3.02 CONSTRUCTION

A. The directional bore machine shall be located at the low or downstream end, if possible.

B. The directional bore machine shall be equipped with a spoil transportation equipment using drilling fluid. The drilling fluid shall be compatible for soil condition. The drilling fluid, such as bentonite, shall be used lubricating the casing during pull back operation.

C. The drill bit head shall not be greater than the diameter of the pipe.

D. The directional bore machine shall be equipped with an output signal that is located within the drill bit head. The output signal from the drill bit head shall allow the operator of the directional bore machine to track the location of the frill bit head.

E. Spoil material and drilling fluid shall be removed from the working pits and disposed of properly.

F. After completion of the pilot bore pipe installation and the backfill operation, the Contractor shall restore the profile of the right-of-way and/or surface to its original condition.

3.03 PERSONNEL REQUIREMENTS

A. All personnel shall be fully trained in their respective duties as part of the directional boring crew and in safety. Training shall be provided specific to the project if any potential hazards may be encountered which has not already been included in personnel's training.

3.04 BORING PROCEDURE

A. Site Preparation:
Prior to any alterations to work-site, contractor shall photograph or video tape entire work area, including entry and exit points. One copy of which shall be given to Engineer and one copy to remain with contractor for a period of one year following the completion of the project.

B. Bore Path Survey:
Entire drill path shall be accurately surveyed with entry and exit stakes placed in the appropriate locations within the areas indicated on drawings. If contractor is using a magnetic guidance system, drill path will be surveyed for any surface geo-magnetic variations or anomalies.

C. Environmental Protection:
Contractor shall place silt fence between all boring operations and any drainage, wetland, waterway or other area designated for such protection by contract documents, state, federal and local regulations. Additional environmental protection necessary to contain any hydraulic or boring fluid spills shall be put in place, including berms, liners, turbidity curtains and other measures. Contractor shall adhere to all applicable environmental regulations. Fuel or oil may not be stored in bulk containers within 200' of any water-body or wetland.

D. Utility Locates:
Contactor shall notify all companies with underground utilities in the work area via the state or local "one-call" to obtain utility locates.

Once the utilities have been located Contractor shall physically identify the exact location of the utilities by vacuum or hand excavation, when possible, in order to determine the actual location and path of any underground utilities which might be within 20 feet of the bore path. Contractor shall not commence boring operations until the location of all underground utilities within the work area have been verified.

E. Safety:
Contractor shall adhere to all applicable state, federal and local safety regulations and all operations shall be conducted in a safe manner. Safety meetings shall be conducted at least weekly with a written record of attendance and topic submitted to Engineer.

F. Pipe:
Pipe shall be connected together in one length prior to pull-back operations, if space permits. Pipe will be placed on pipe rollers before pulling into bore hole with rollers spaced close enough to prevent excessive sagging of pipe.

G. Pilot Hole:
Pilot hole shall be drilled on bore path with no deviations greater than 5% of depth over a length of 100'. In the event that pilot does deviate from bore path more than 5% of depth in 100', contractor will notify Engineer and Engineer may require contractor to pull-back and re-drill from the location along bore path before the deviation.

In the event that an obstruction is encountered during the pilot bore, or the pilot hole pipe is misaligned, the pipe is to be removed from the borehole and the borehole shall be filled with pumpable, flowable fill at a sufficient pressure to and fill all voids. The cost of the pumpable, flowable fill, removal of pipe and re-bore/re-installing the pipe is incidental to the cost of the project.

H. Reaming:
Upon successful completion of pilot hole, contractor will ream bore hole to a minimum of 25% greater than outside diameter of pipe using the appropriate tools. Contractor will not attempt to ream at one time more than the boring equipment and mud system are designed to safely handle.

I. Pull-Back:
After successfully reaming bore hole to the required diameter, contractor will pull the pipe through the bore hole. In front of the pipe will be a swivel. Once pull-back operations have commenced, operations must continue without interruption until pipe is completely pulled into bore hole. During pull-back operations contractor will not apply more than the maximum safe pipe pull pressure at any time.

In the event that pipe becomes stuck, contractor will cease pulling operations to allow any potential hydro-lock to subside and will commence pulling operations. If pipe remains stuck, contractor will notify Engineer. Engineer and contractor will discuss options and then work will proceed accordingly.

3.05 SITE RESTORATION

A. Following boring operations, contractor will de-mobilize equipment and restore the work-site to original condition. All excavations will be backfilled and compacted to 95% of original density. Landscaping will be restored to original.

3.06 EXCAVATION

A. The Contractor shall, during the entire period of construction, provide and maintain any necessary equipment as will, whenever practicable, keep his excavations reasonably free

from water pending construction. When necessary to use pumps the Contractor must dispose of the water without detriment to adjacent properties.

3.07 SHEETING AND SHORING

A. General:
Except where banks may be cut back on a stable slope, excavation for trenches shall be properly and substantially sheeted, braced and shored, as necessary, to prevent caving or sliding, to provide protection for the workmen and the work, and to provide protection for existing structures and facilities. Sheeting, bracing and shoring shall be designed and built to withstand all loads that might be caused by earth movement or pressure, and shall be rigid, maintaining its shape and position under all circumstances.

3.08 FINAL GRADING AND DISPOSAL OF EXCESS EXCAVATED MATERIALS

A. General:
1. Except as otherwise indicated, all excess excavated materials shall be disposed of by the Contractor away from the site of the work.
2. Excavated rock, junk and debris encountered in excavation work, and other similar waste materials shall be disposed of away from the site of the work.
3. The disposal of waste and excess excavated materials, including hauling, handling, leveling and surfacing, shall be at the Contractor's expense.

B. Restoration of disturbed earth:
The Contractor shall restore all earth areas disturbed from the original condition by his operations. Restoration will be by seeding, fertilizing and mulching to obtain an established cover or by appropriate pavement and street repair.

3.09 RESPONSIBILITY OF CONTRACTOR FOR BACKFILL SETTLEMENT

A. The Contractor shall be responsible financially and otherwise, for:
1. All settlement of trench and other backfill which may occur from time of original backfilling until the expiration of 1 year after the date of final payment for the entire contract under which the backfilling work was performed.
2. The refilling and repair of all backfill settlement and the repair or replacement to the original or a better condition of all pavement, top surfacings, driveways, walks, surface structures, utilities, drainage facilities and sod which may have been damaged as a result of backfill settlement or which have been removed or destroyed in connection with backfill replacement operations.
3. All damage claims or court actions against the Owner for any damage directly or indirectly caused by backfill settlement.

B. The Contractor shall make all necessary backfill replacements and repairs, or replacements appurtenant thereto, within 30 days after notification by the Owner or Engineer. Upon the Contractor's failure to do so, the Owner may do, or have done the necessary work and charge the cost to the Contractor.

3.10 MAINTENANCE OF TRAFFIC

A. The Contractor shall conduct his work so as to interfere as little as possible with public travel, whether vehicular or pedestrian; whenever it is necessary to cross, obstruct, or close roads, driveways, and walks, whether public or private, the Contractor shall at his own expense provide and maintain suitable and safe bridges, detours, or other temporary expedients for the accommodation of public and private travel, and shall give reasonable notice to owners of private drives before interfering with them; provided however, that such maintenance of traffic will not be required at any point where the Contractor has obtained permission from the owner and tenant of private property, or from the authority having jurisdiction over the public property involved, to obstruct traffic at any designated point thereon and for the duration of whatever period of time as may be agreed upon.

END OF SECTION

PART 1 - GENERAL

1.01 SECTION INCLUDES

A. Boring under highways, roads and railroads.

B. Casing pipe.

1.02 RELATED SECTIONS

A. Section 02010: Subsurface Conditions

B. Section 02221: Trenching, Backfilling and Compaction

1.03 SUPERVISION AND QUALITY

A. This work shall comply with all codes governing and all insurance requirements. Work shall be undertaken only when the construction superintendent is present and supervising the work.

1.04 REQUIREMENTS OF REGULATORY AGENCIES

A. Crossings shall be completed in accordance with applicable federal, state and local regulations. In the case of railroad crossings, the project shall comply with regulations established by the railroad company.

PART 2 - PRODUCTS

2.01 CASING PIPE

A. Smooth wall casing pipe shall be of welded steel construction and shall be new material with a minimum yield point of 35,000 psi. The pipe shall have a wall thickness as noted on the plans.

B. Casing wall thickness shall be 1/4 inch thick for casing pipe 10 inch thru 16 inches, 3/8 inch thick for casing pipe 18 inch thru 24 inches, 1/2 inch thick for 30 inches.

2.02 CARRIER PIPE

A. Carrier pipe shall be as noted on the Plans and specified within.

2.03 CASING SPACERS

A. Spacers shall be RACI Type F from Public Works Marketiug or approved equal. HDPE spacers shall be Type F or Type G for carrier pipe sizes 4-inch through 16-inch. Three spacers shall be used for each joint of pipe with a maximum spacing of 6 ft.

2.04 END SEALS

A. End seals shall be synthetic rubber "wrap around" style with stainless steel bond as manufactured by Advance Products & Systems, Inc. or approved equal.

PART 3 - EXECUTION

3.01 GENERAL

A. Crossings under highways, roads and railroads shall be continuously encased under the through roadways, median, ramps and shoulder area to the limits called for or required by the federal, state and local regulations. Railroad crossings shall conform to the requirements of the regulations established by the railroad company.

B. Work shall be performed in a safe and proper manner, with suitable precautions being taken against hazards of every kind. All crossings shall be bored, unless rock formations or other obstructions are encountered that prevents boring or pushing operations. If such conditions are encountered, excavation shall be performed by standard tunneling methods.

C. Excavations shall provide adequate clearance for installation of and removal of equipment.

D. Backfilling and construction of fills and embankments during freezing weather shall not be done except by permission of the Engineer. No backfill, fill or embankment materials shall be installed on frozen surfaces nor shall frozen materials, snow or ice be placed in any backfill, fill or embankments.

E. When operating on pavements or walks all equipment shall be rubber tired, except for excavation equipment. Excavating equipment, in such cases, shall not have grousers, cleats or lugs on the tracks. The Contractor shall take all reasonable precautions to protect the existing pavements and walks.

F. No classification of excavated materials shall be made. Boring excavation and trenching work shall include the removal and subsequent handling of all materials excavated or otherwise removed in performance of the contract work, regardless of the type, character, composition or condition thereof.

G. Pipe lines and other existing underground installations and structures in the vicinity of the work to be done hereunder are not indicated on the plans. The Contractor shall make every effort to locate all underground pipe lines, conduits and structures by contacting owners of underground utilities and by prospecting in advance of excavation and boring. Damage to any existing underground installation caused by the Contractor's operation shall be repaired at the Contractor's expense.

H. Any delays or extra cost to the Contractor caused by pipe lines or other underground structures or obstructions not shown by the plans, or found in locations different than those indicated, shall not constitute a claim for extra work, additional payment or damages.

I. Erosion control of disturbed areas shall be required during the construction period through the use of check dams, siltation pools, mulching, etc.

J. The Contractor shall meet the specific requirements of the Highway Department or Railroad. The Contractor shall obtain all necessary permits and insurance.

K. Operation:
Use all means necessary to control dust or mud that may interfere with operation.

L. Protection:
1. Use all means necessary to protect material and preserve specification requirements.
2. Replace all damaged material or material that has lost specification requirements.

3.02 EXCAVATION

A. The Contractor shall, during the entire period of construction, provide and maintain any necessary equipment as will, whenever practicable, keep his excavations reasonably free from water pending construction. When necessary to use pumps the Contractor must dispose of the water without detriment to adjacent properties.

3.03 SHEETING AND SHORING

A. General:
Except where banks may be cut back on a stable slope, excavation for trenches shall be properly and substantially sheeted, braced and shored, as necessary, to prevent caving or sliding, to provide protection for the workmen and the work, and to provide protection for existing structures and facilities. Sheeting, bracing and shoring shall be designed and built to withstand all loads that might be caused by earth movement or pressure, and shall be

rigid, maintaining its shape and position under all circumstances.

3.04 CASING AND CARRIER PIPE INSTALLATION

A. Casing pipe:

1. Before starting work on borings, complete details of the method of operation and casing to be used shall be submitted to the Engineer for review. All permits shall be obtained by the Contractor.
2. Casing pipes shall have a clear inside diameter not smaller than the size indicated on the schedule.
3. The casing pipe shall be installed by jacking into place. Earth displaced by the casing pipe shall be removed through the interior of the casing by hand, by auger, or by other acceptable means. Sections of the casing pipe shall be welded together to form a continuous casing capable of resisting all stresses, including jacking stresses. The casing pipe in its final position shall be straight and true in alignment and grade. There shall be no space between the earth and the outside of the casing.

B. Carrier pipe:

Polyethylene casing insulators shall be strapped to each end of each piece of pipe. The pipe shall then be pushed into the casing pipe with care being taken to ensure the joints are not displaced. The joints in the installed pipe within the casing shall be tested for leakage before the backfill is installed.

C. Casing closure:

Following the installation of the carrier pipe in the casing pipe, the ends of the casing pipe shall then be closed with wrap around or pull-on end seals as manufactured by Advance Products & Systems, Inc.

3.05 FINAL GRADING AND DISPOSAL OF EXCESS EXCAVATED MATERIALS

A. General:

1. Except as otherwise indicated, all excess excavated materials shall be disposed of by the Contractor away from the site of the work.
2. Excavated rock, junk and debris encountered in excavation work, and other similar waste materials shall be disposed of away from the site of the work.
3. The disposal of waste and excess excavated materials, including hauling, handling, leveling and surfacing, shall be at the Contractor's expense.

B. Restoration of disturbed earth:

The Contractor shall restore all earth areas disturbed from the original condition by his operations. Restoration will be by seeding, fertilizing and mulching to obtain an established cover or by appropriate pavement and street repair.

3.06 RESPONSIBILITY OF CONTRACTOR FOR BACKFILL SETTLEMENT

A. The Contractor shall be responsible financially and otherwise, for:

1. All settlement of trench and other backfill which may occur from time of original backfilling until the expiration of 1 year after the date of final payment for the entire contract under which the backfilling work was performed.
2. The refilling and repair of all backfill settlement and the repair or replacement to the original or a better condition of all pavement, top surfacings, driveways, walks, surface structures, utilities, drainage facilities and sod which may have been damaged as a result of backfill settlement or which have been removed or destroyed in connection with backfill replacement operations.
3. All damage claims or court actions against the Owner for any damage directly or indirectly caused by backfill settlement.

B. The Contractor shall make all necessary backfill replacements and repairs, or replacements appurtenant thereto, within 30 days after notification by the Owner or Engineer. Upon the Contractor's failure to do so, the Owner may do, or have done, the necessary work and charge the cost to the Contractor.

3.07 MAINTENANCE OF TRAFFIC

A. The Contractor shall conduct his work so as to interfere as little as possible with public travel, whether vehicular or pedestrian; whenever it is necessary to cross, obstruct, or close roads, driveways, and walks, whether public or private, the Contractor shall at his own expense provide and maintain suitable and safe bridges, detours, or other temporary expedients for the accommodation of public and private travel, and shall give reasonable notice to owners of private drives before interfering with them; provided however, that such maintenance of traffic will not be required at any point where the Contractor has obtained permission from the owner and tenant of private property, or from the authority having jurisdiction over the public property involved, to obstruct traffic at any designated point thereon and for the duration of whatever period of time as may be agreed upon.

END OF SECTION

PART 1 - GENERAL

1.01 SECTION INCLUDES

A. Temporary sediment barrier.

B. Temporary ditch checks

1.02 QUALITY ASSURANCE

A. Regulatory Requirements
Erosion controls shall meet all requirements of the EPA.

1.03 SYSTEM DESCRIPTION

A. Definitions
1. Silt Fence
A temporary sediment barrier consisting of filter fabric buried at the bottom, stretched, and supported by posts.
2. Ditch Checks
A barrier installed across, or at the toe of, a slope to intercept and detain sediment.

B. Purpose
1. Silt Fence
To retain sediment from small disturbed areas by reducing the velocity of sheet flows to allow sediment deposition.
2. Ditch Checks
To intercept and detain small amounts of sediment from unprotected areas of less than 1/2 acre.

C. Location
1. Silt Fence
a. Below small disturbed areas.
b. Where runoff can be stored behind the sediment fence without damaging the fence or the submerged area behind the fence.
c. Do not install sediment fences across streams, ditches, or waterways.
2. Ditch Checks
a. Where contributing area is approximately 1/2 acre, or less.
b. Where there is no concentration of water in a channel above the barrier.
c. Where erosion would normally occur in form of sheet erosion.
d. Where length of slope above the barrier is less than 100 feet.
e. Straw bales shall not be used on high sediment producing areas, above "high risk" areas, where water concentrates, or where there would be a possibility of a washout.

D. Planning

1. A sediment fence is a permeable barrier that shall be planned as a system to retain sediment on the construction site. The fence retains sediment primarily by retarding flow and promoting deposition. In operation, generally the fence becomes clogged with fine particles, which reduce flow rate. this causes a pond to develop more quickly behind the fence. Anticipate ponding and provide sufficient storage areas and overflow outlets to prevent flows from overtopping the fence. Since sediment fences are not designed to withstand high heads, locate them so that only shallow pools can form. Tie the ends of a sediment fence into the landscape to prevent flow around the end of the fence before the pool reaches design level. Provide stabilized outlets to protect the fence system and release storm flows that exceed the design storm.
2. Deposition occurs as the storage pool forms behind the fence. Plan deposition areas at accessible points to promote routine cleanout.

E. Design Criteria

1. Silt Fence
   a. Ensure that the drainage area is no greater than 1/4 acre per 100 ft. of fence.
   b. Make the fence stable for the 10-yr. peak storm runoff.
   c. Ensure that the depth of impounded water does not exceed 1.5 ft. at any point along the fence.
   d. Provide a riprap splash pad or other outlet protection device for any point where flow may overtop the sediment fence, such as natural depressions or swales. Ensure that the maximum height of the fence at a protected, reinforced outlet does not exceed 1 ft. and that support post spacing does not exceed 4 ft.
   e. The design life of a synthetic sediment fence should be 6 months.

PART 2 - PRODUCTS

2.01 MATERIALS

A. Silt Fence

1. Use a synthetic filter fabric or a pervious sheet of polypropylene, nylon, polyester, or polyethylene yard, which is certified by the manufacturer or supplier as conforming to the requirements shown in Table below.
2. Synthetic filter fabric should contain ultraviolet ray inhibitors and stabilizers to provide a minimum of 6 months of expected usable construction life at a temperature range of 0 to 120° F.
3. Posts for sediment fences shall be either 4-inch diameter pine, 2-inch diameter oak, or 1.33 lb/linear ft. steel with a minimum length of 4 ft. Make sure that steel posts have projections to facilitate fastening the fabric.
4. For reinforcement of standard strength filter fabric, use wire fence with a minimum 14 gauge and a maximum mesh spacing of 6 inches.

5. SEDIMENT FENCE FABRIC SPECIFICATIONS

Physical Property	Minimum Requirements
Filtering Efficiency	85%
Tensile Strength at 20% (max.) Elongation	Standard Strength @ 30 psi Extra Strength @ 50 psi
Slurry Flow Rate	0.3 gal/sq ft/min

B. Straw Bales
1. Straw shall be locally baled material.
2. Anchors shall be #5 reinforcing bars or 2"x2" oak stakes.

PART 3 - EXECUTION

3.01 CONSTRUCTION

A. Silt Fence
1. Construct the sediment barrier of standard strength or extra strength synthetic filter fabrics.
2. Ensure that the height of the sediment fence does not exceed 18 inches above the ground surface. (Higher fences may impound volumes of water sufficient to cause failure of the structure.)
3. Construct the filter fabric from a continuous roll cut to the length of the barrier to avoid joints. When joints are necessary, securely fasten the filter cloth only at a support post with overlap to the next post.
4. Support standard strength filter fabric by wire mesh fastened securely to the upslope side of the posts using heavy duty wire staples at least 1 inch long, or tie wires. Extend the wire mesh support to the bottom of the trench.
5. When a wire mesh support fence is used, space posts a maximum of 8 ft. apart. Support posts should be driven securely into the ground to a minimum of 18 inches.
6. Extra strength filter fabric with 6-ft. post spacing does not require wire mesh support fence. Staple or wire the filter fabric directly to the posts.
7. Excavate a trench approximately 4 inches wide and 8 inches deep along the proposed line of posts and upslope from the barrier.
8. Backfill the trench with compacted soil or gravel placed over the filter fabric.
9. Do not attach filter fabric to existing trees.

B. Ditch Checks
1. Bales will be placed in a single row, lengthwise, on the contour and embedded in the soil to a depth of 3 inches.

2. Bales must be securely anchored in place by stakes or re-bars driven through the bales or by other acceptable means to prevent displacement.
3. Inspection must be frequent and repair or replacement must be made promptly as needed.

3.02 MAINTENANCE

A. Silt Fence
1. Inspect sediment fences at least once a week and after each rainfall. Make any required repairs immediately.
2. Should the fabric of a sediment fence collapse, tear, decompose, or become ineffective, replace it promptly.
3. Remove sediment deposits as necessary to provide adequate storage volume for the next rain and to reduce pressure on the fence. Take care to avoid undermining the fence during cleanout.
4. Remove all fencing materials and unstable sediment deposits and bring the area to grade and stabilize it after the contributing drainage area has been properly stabilized.

B. Ditch Checks
1. Inspect straw bale barriers at least once a week and after each rainfall. Make any required repairs immediately.
2. Should the barrier collapse, decompose or become ineffective, replace it promptly.
3. Remove sediment deposits as necessary to provide adequate storage volume for the next rain and to reduce pressure on the barrier.
4. Remove the barrier and unstable sediment deposits and bring the area to grade and stabilize it after the contributing drainage area has been properly stabilized.

3.03 CLEANUP

A. General
1. Remove all silt and other debris from project site.
2. Remove all silt fence and ditch check materials from project site.
3. Grade area for uniform slope to blend with existing or finish contours.

EROSION CONTROL – DITCH CHECK

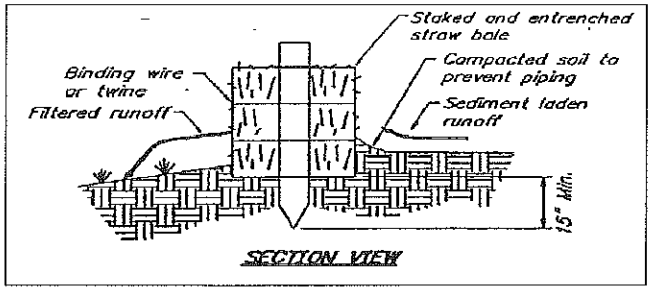

Notes:

1. *Straw bales shall not be used longer than a time period of three months. If construction continues beyond this time period, replace bales with new.*

2. *Excavate a trench along the areas that the straw bales will be used as erosion control to a depth of 4 inches and to the width of one straw bale. The straw bales then shall be placed in the trench. Place excavated material on upstream side of the trench.*

3. *Straw bales shall be anchored with a min. of 2 stakes or rebars driven into the underlying soil, making sure that the binding wire or twine is facing the sides and not touching the soil. The first stake into each bale shall be driven toward the previously laid bale to force them together.*

4. *Spacing between the bales shall be tightly chinked with loose straw.*

5. *After straw bales are in place the excavated soil shall be backfilled against the upslope side of the straw bales to a height of 4 inches after compacting.*

6. *Straw bales shall be inspected after each rainfall to determine if any repairs or replacements to the straw bales are needed. If it is determined that the straw bales need to be repaired or replaced, the work will occur immediately. Sediment accumulations must be removed when they reach 1/2 the barrier height.*

EROSION CONTROL – SILT FENCE

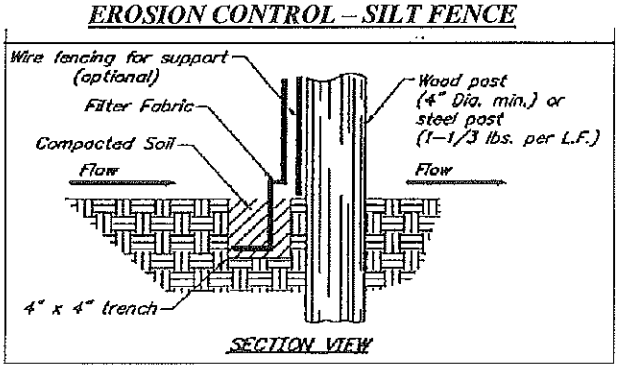

Notes:

1. *The filter fabric shall have a minimum filtering efficiency of 75% a minimum tensile strength of 30 lbs. per linear inch and a flow rate of 0.3 gallons per square foot per minute. The filter fabric shall also have ultraviolet ray inhibitors to assure a life use expectancy of 6 months at 0 to 100 degrees fahrenheit.*

2. *The filter fabric shall be 36 inches or less in height. Joints shall occur only at posts with 6 inch minimum overlap. Posts shall be spaced 10 feet on center when wire mesh support is included or 6 feet on center without wire mesh support. A minimum of 8 inches of fabric will be buried in the 4" x 4" trench.*

3. *The silt fence shall be inspected after every rainfall to determine if any part of the fence needs to be repaired or replaced. If it is determined that the fence needs any repair or replacement, this work will occur immediately.*

4. *Sediment deposits shall be removed after each rainfall or before they accumulate to 1/3 of the fence height.*

PART 1 - GENERAL

1.01 SELECTION INCLUDES

Removing and replacement of various pavement surface required for this project.

1.02 RELATED SECTION:

Section 02221: Trenching, Backfilling, and Compaction

1.03 JOB CONDITION:

A. Operation:
   1. Use all means necessary to control dust or mud that may interfere with the neighborhood.
   2. Traffic access shall be maintained.

B. Protection:
   1. Use all means necessary to protect material and preserve specification requirements.
   2. Replace all damaged material or material that has lost specification requirements.

PART 2 - PRODUCTS

Not Specifically Required

PART 3 - EXECUTION

3.01 STREET REPAIR AND DRIVEWAY REPAIR

A. General:
These specifications provide a minimum standard for the removing of various pavement surfaces, open trenches, excavating, method of backfilling and replacement of various pavement surfaces. These specifications meet the requirements of the Owner as a standard to be followed in all cases where street or drive surfaces are disturbed in the process of any and all excavation work.

B. Class A Street (Portland cement concrete pavement):

1. Prior to replacement of the concrete pavement, the concrete surface shall be scored with a saw on each side of the required excavation to a minimum depth of 2 inches. The size of the area cut shall be 1 foot greater in all directions than the size of the excavation. This is to provide a minimum 6 inch shoulder of undisturbed subgrade surrounding the excavation.
2. All broken concrete shall be removed from the site and not used for backfill material.
3. The walls of the excavation shall be vertical for the full length. Sufficient bracing or shoring shall be provided to hold the excavation walls in vertical plane and to prevent under-cutting of the undisturbed pavement. Sloping of trench walls in deep excavations may be permitted by the Owner or his authorized representative. Bracing or shoring may be omitted where, in the opinion of the Owner's authorized representative, depth of excavation and soil conditions warrant.
4. All excavated materials shall be removed and disposed of after work within the excavated area is complete. The excavation shall be backfilled with clean 1/2 inch aggregate (3/8 inch minimum to 3/4 inch maximum) or type as specified in Section 109 and 109.1 and 109.2 of the Standard Specifications for State Road and Bridge Construction, State Highway Commission of Missouri, current edition, to the bottom of the concrete paving.
5. The pavement removed shall be replaced with high early strength Class A concrete having a compressive strength of 3,750 pounds per square inch at 27 days. The new finish shall be flush with the present street surface.

C. Class B Street (Hot mix asphaltic concrete or brick surface):

1. Conform to paragraphs (1) through (4) inclusive of the specifications for Class A Street (Portland cement concrete pavement).
2. All removed paving shall be removed from the site and not used for backfill material. The minimum 6 inch shoulder shall be excavated to a point no less than 9 inches below the existing street surface. Across the backfilled excavation and resting on the 6 inch shoulders shall be poured a 6 inch slab of high early strength class A concrete having a compressive strength of 3,750 pounds per square inch at 27 days. After 48 hours, this slab shall be covered with 3 inches of hot mix asphalt and rolled. The new finish shall be flush with the present street surface.

D. Class C Street (D.A.S.T., double asphalt surface treatment roads with base):

1. Conform to paragraphs (1) through (4) inclusive of the specifications for Class D Streets below, except final 6 inches of backfill shall be rolled stone base material. The crushed rock base shall be replaced by applying 2 lifts of 3 inch each of crushed rock to state highway specifications. Each lift shall be saturated with water and rolled. When compaction has been attained, and surface moisture evaporated, double asphalt surface treatment shall be applied. Penetration course shall be MC-0 at the rate of 0.20 gallon per square yard. Surface course shall be RC-3 at the rate of 0.35 per gallon per square yard and to be covered with clean 3/8 inch to 1/2 inch crushed aggregate at the rate of 20 pounds per square yard with a lap of 1 foot outside the disturbed area. Surface course shall be applied twice.

E. Class D Street: (Surface asphalt treatment roads and earth base):
   1. Initial cutting will be permitted by excavating machinery.
   2. Excavation wall shall be vertical and shall be braced and shored to prevent undercutting or crumbling. Sloping of trench walls in deep excavations may be permitted by the Owner's authorized representative, if depth of excavation and soil conditions warrant.
   3. Backfill shall consist of clean 1/2 inch aggregate or of rolled stone base material, to the level of the existing paving.
   4. Surface treatment shall conform to penetration and surface course for Class C Streets. Surface course shall be applied once.

F. Crushed Stone Streets or Drives:
   1. Six inches of compacted stone base meeting Missouri Highway Spec. 1007.1, Type 1 aggregate shall be placed over all disturbed areas.
   2. Preparation shall be as required by the applicable sub-articles of Section 203 of the Missouri Standard Specification for Highway Construction, 1977 Edition or latest revision.
   3. Crushed stone shall be placed and compacted in two lifts.
   4. All County and City gravel surface roads shall be backfilled entirely with approved crushed rock or river gravel. The disposal of unsuitable material excavated will be the responsibility of the Contractor.

END OF SECTION

PART 1 - GENERAL

1.01 SECTION INCLUDES

Ductile iron pressure pipe.

1.02 RELATED SECTIONS

A. Section 02221: Trenching, Backfilling, and Compaction

B. Section 02640: Valves, Hydrants, and Accessories

C. Section 02675: Disinfecting Water Mains

1.03 QUALITY ASSURANCE

A. Supervision:
1. Provide full time superintendent on the project who is qualified and experienced in the installation of ductile iron pipe.
2. The superintendent shall direct all work in the execution of this portion of the work to insure proper and adequate installation.

B. Codes and standards:
Installation shall comply with specifications, AWWA C600 and manufacturer's recommendations.

1.04 SUBMITTALS

A. Shop drawings:
Submit shop drawings to the Engineer within 30 days after award of Contract in accordance with Section 01340, showing all the materials to be furnished and installed.

B. As-built drawings:
During progress of the work, maintain an accurate record of all changes made in the plumbing installation from the layout and materials shown on the approved shop drawings.

PART 2 - PRODUCTS

2.01 MATERIALS

A. where designated on the Plans, piping and fittings shall be ductile iron pipe.

B. Pipe shall have slip joints or mechanical joints. Only one of the two joint types shall be used on this project.

C. All fittings shall be mechanical joints.

D. Four inch diameter pipe shall be Class 51.

E. All 6, 8, 10, and 12 inch diameter pipe shall be Class 50.

F. All pipe and fittings shall have cement lining and bituminous coatings inside and outside.

G. All materials shall comply with the following specifications or the latest revisions thereof.

ANSI (A21.4)	(AWWA C-104)	Cement lining for cast iron pipe.
ANSI (A21.11)	(AWWA C-111)	Mechanical joints for cast iron and ductile iron pressure pipe and fittings.
ANSI (A21.10)	(AWWA C-110)	Short bodied fittings for water.
WW-P-421a	Type II	Roll-on rubber gasket joint cast iron pipe. Pipe size 12 inch and smaller.
ANSI (A21.51) ANSI (A21.50)	(AWWA C-151) (AWWA C-150)	Ductile Iron pipe
(AWWA C-100)		Cast iron pressure fittings.

PART 3 - EXECUTION

3.01 HANDLING

A. Pipe, fittings, and accessories shall be handled in a manner that will ensure their installation in the work in sound, undamaged condition. Equipment, tools and methods used in unloading, reloading, hauling and laying pipe and fittings shall be such that they are not damaged. Hooks inserted in ends of pipe shall have broad, well padded contact surfaces.

B. Pipe and fittings in which the cement lining has been broken or loosened shall be replaced by and at the expense of the Contractor. Where the damaged areas are small and readily accessible, the Contractor may be permitted to repair the lining, subject to the approval of the Engineer.

C. All pipe coating which has been damaged shall be repaired by the Contractor before installing the pipe.

3.02 CUTTING PIPE

A. Cutting of ductile iron pipe shall be in accordance with the recommendations of the manufacturer.

3.03 CLEANING

A. The interior of all pipe and fittings shall be thoroughly cleaned of all foreign matter before being installed and shall be kept clean until the work has been accepted. All lumps, blisters, and excess coating shall be removed from exterior spigot and interior bell surfaces. Such surfaces shall be wire brushed and wiped clean, dry, and free from oil and grease before placing the spigot in the bell. All joint contact surfaces shall be kept clean until the jointing is completed.

B. Every precaution shall be taken to prevent foreign material from entering the pipe while it is being installed. No debris, tools, clothing, or other material shall be placed in the pipe.

C. Whenever pipe laying is stopped, the open end of the line shall be sealed with a watertight plug. All water that may have entered the trench shall be removed prior to removing the plug. It is essential that no mud, trench water, or other foreign matter be permitted to enter the pipe line at any time.

3.04 INSPECTION

During installation, while suspended and hanging free, each pipe and fitting shall be inspected for defects and rung with a light hammer to detect cracks. All defective, damaged, or unsound pipe and fittings shall be rejected and removed from the site of the work.

3.05 ALIGNMENT OF BELL AND SPIGOT PIPE

A. Pipe lines or runs intended to be straight shall be laid straight. Deflections from a straight line taken in joints shall not be greater than that recommended by the pipe manufacturer.

B. Either shorter pipe sections, or special bends, shall be installed where the alignment or grade requires them.

3.06 LAYING PIPE

A. Pipe shall be protected from lateral displacement by means of pipe embedment material installed as provided in the trench backfill specification.

B. Under no circumstances shall pipe be laid in water and no pipe shall be laid under unsuitable weather or trench conditions.

C. Pipe shall be laid with the bell ends facing the direction of laying except when making closures.

3.07 MECHANICAL JOINTS

Mechanical joints shall be carefully assembled in accordance with the manufacturer's recommendations. If effective sealing is not obtained, the joint shall be disassembled, thoroughly cleaned and reassembled. Overtightening bolts to compensate for poor installation practice will not be permitted.

3.08 BOLTLESS GASKETED JOINTS

All instructions and recommendations of the pipe manufacturer, relative to gasket installation and other jointing operations, shall be observed and followed by the Contractor. All joint surfaces shall be lubricated with heavy vegetable soap solution immediately before the joint is completed.

3.09 FLANGED JOINTS

When bolting flanged joints, care shall be taken to ensure that there is no restraint on the opposite end of the pipe or fitting which would prevent uniform gasket compression or which would cause unnecessary stress in the flanges. One flange shall be free to move in any direction while the flange bolts are being tightened. Bell and spigot joints shall not be packed or assembled until all flanged joints affected thereby have been tightened. Bolts shall be tightened gradually and at a uniform rate, in such a manner that gasket compression is uniform over the entire area of the gasket.

3.10 CONNECTIONS WITH EXISTING PIPE LINES

A. Where connections are made between new work and existing piping, such connections shall be made using suitable and proper fittings to suit the conditions encountered. Each connection with an existing water pipe shall be made at a time and under conditions which will least interfere with water service to customers affected thereby, and as authorized by the Owner. Suitable facilities shall be provided for proper dewatering, drainage and disposal of all water removed from the dewatered lines and excavations, without damage to adjacent property.

B. Great care shall be taken to prevent pipe line contamination when dewatering, cutting into, and making connections with, existing pipe lines used for the conveyance or distribution of water for domestic or public use. No trench water, mud, or other contaminating substance shall be permitted to get into the connected line or lines at any time during the progress of the work. The interiors of all pipe, fittings and valves, both new and re-used, installed in such connections, shall be thoroughly cleaned before installation.

3.11 REACTION ANCHORAGE AND BLOCKING

A. All unlugged bell and spigot or all-bell tees, Y-branches and bends deflecting 11-1/4 degrees or more which are installed in piping subjected to internal hydrostatic heads in excess of 15 feet in exposed, or 30 feet in buried, piping shall be provided with suitable reaction blocking, struts, anchors, clamps, joint harness, or other adequate means for preventing any movement of the pipe caused by unbalanced internal liquid pressure.

B. Trench installation:
Where in trench, the foregoing designated fittings shall be provided with concrete thrust blocking between the fitting and solid, undisturbed ground in each case, except where solid ground blocking support is not available. At the tops of slopes vertical angle bends shall be anchored by means of steel strap or rod anchors securely embedded in or attached to a mass of concrete of sufficient weight to resist the hydraulic thrust at the maximum pressures to which the pipe will be subjected. All concrete blocking and anchors shall be installed in such a manner that all joints between pipe and fittings are accessible for repair.

C. The bearing area of concrete reaction blocking against the ground or trench bank shall be as shown by the plans or as directed by the Engineer in each case. In the event that adequate support against undisturbed ground cannot be obtained, metal harness anchorages consisting of steel rods or bolts across the joint and securely anchored to pipe and fitting or other adequate anchorage facilities approved by the Engineer shall be installed to provide the necessary support. Should the lack of a solid vertical excavation face be due to careless or otherwise improper trence excavation, the entire cost of furnishing and installing metal harness anchorages in excess of the contract value of the concrete blocking replaced by such anchorages shall be borne by the Contractor.

D. For other locations:
Reaction blocking, struts, anchorages, or other supports for fittings installed in fills or other unstable ground, above grade, or exposed within structures, shall be provided as required by the plans or as directed by the Engineer.

E. Protection of metal surfaces:
All steel clamps, rods, bolts and other metal accessories used in reaction anchorages or joint harness subject to submergence or contact with earth or other fill material and not encased in concrete shall be adequately protected from corrosion with not less than two coats of Koppers "Bitumastic No. 50", or approved equal, heavy coal tar coating material, applied to clean, dry metal surfaces. The first coat shall be dry and hard before the second coat is applied. Metal surfaces exposed above grade or within structures shall be painted with two coats (in addition to a primer coat) of a paint approved by the Engineer.

3.12 SEPARATION OF WATER MAINS, SANITARY SEWERS AND COMBINED SEWERS - MoDNR

A. Parallel installation:
Water mains shall be laid at least ten feet horizontally from any existing or proposed sewer. The distance shall be measured edge to edge. In cases where it is not practical to maintain a ten-foot separation, the department may allow deviation on a case-by-case basis, if supported by data from the design engineer. Such deviation may allow installation of the water main closer to a sewer, provided that the water main is laid in a separate trench or on an undisturbed earth shelf located on one side of the sewer and on either case, at such an elevation that the bottom of the water main is at least 18 inches above the top of the sewer. In areas where the recommended separations cannot be obtained, either the waterline or the sewer line shall be constructed of mechanical joint pipe or cased in a continuous casing.

B. Crossings:
Water mains crossing sewers shall be laid to provide a minimum vertical clear distance of 18 inches between the outside of the water main and the outside of the sewer. This shall be the case where the water main is either above or below the sewer. At crossings, the full length of water pipe shall be located so both joints will be as far from the sewer as possible but in no case less than ten feet. Special structural support for the water and sewer pipes may be required. In areas where the recommended separations cannot be obtained either the waterline or the sewer line shall be constructed of mechanical joint pipe or cased in a continuous casing that extends no less than ten feet on both sides of the crossing.

C. Exception:
Any variance from the specified separation distances in paragraphs A and B must be submitted to the engineer for approval.

D. Force mains:
There shall be at least a ten-foot horizontal separation between water mains and sanitary sewer force mains and they shall be in separate trenches. In areas where theses separations cannot be obtained, either the waterline or the sewer line shall be cased in a continuous casing.

E. Sewer manholes:
No waterline shall be located closer than ten feet to any part of a sanitary or combined sewer manhole.

F. Disposal facilities:
No waterline shall be located closer than 25 feet to any on-site wastewater disposal facility, agricultural waste disposal facility, or landfill.

END OF SECTION

PART 1 - GENERAL

1.01 SECTION INCLUDES

A. Polyethylene encasement.

1.02 RELATED SECTIONS

A. Section 02615: Ductile Iron Pipe

B. Section 02221: Trenching, Backfill, and Compaction

1.03 QUALITY CONTROL

A. Supervision:
Provide full time supervisor trained and familiar with the work to be undertaken.

B. Workmanship:
All workmen shall be skilled and experienced in the specified work.

1.04 SUBMITTALS

A. Shop drawings:
Submit shop drawings to the Engineer within 30 days after award of Contract in accordance with Section 01340.

PART 2 - PRODUCTS

2.01 MATERIALS

A. Polyethylene encasement materials shall be manufactured of virgin polyethylene possessing the following characteristics:

Type, Class, Grade, In accordance with ASTM Specification
Other Characteristics D-1248-68 or latest revision thereof.

Type 1

Class C	Black where exposure to weather (including sunlight) may be more than 48 hours. Exposure to weather shall be kept to a minimum and in no case shall it exceed 10 days.
Grade	E-1
Flow Rate	0.4 maximum
Tensile Strength	1200 psi minimum
Elongation	300 percent minimum
Dielectric Strength	Volume resitivity, ohm-Cm^3 = 1015 800 volts per mil thickness

B. Polyethylene tube material shall have a thickness of 0.008 inches (8 mils). The minus tolerance on thickness shall not exceed 10 percent of the nominal thickness.

C. The minimum tube size for each pipe diameter shall be as listed in Table 1. For pipe sizes greater than 24 inches, tube size may be determined by multiplying the nominal pipe diameter by 2.25 to obtain minimum flat tube width.

TABLE 1

NOMINAL PIPE DIAMETER (INCHES)	POLYETHYLENE FLAT TUBE WIDTH (INCHES)
4	16
6	20
8	24
10	27
12	30
14	34
16	37
18	41
20	45
24	53

D. Adhesive tape shall be a general purpose adhesive tape 1-inch wide and approximately 8 mils thick, such as Scotchtape No. 50, Pol. No. 900, Tapecoat CT or approved equal.

PART 3 - EXECUTION

3.01 INSTALLATION

A. General:
Polyethylene encasement shall be installed on ductile iron pipe and fittings. Although not intended to be a completely air- and water-tight enclosure, the polyethylene shall prevent contact between the pipe and the surrounding backfill.

B. Pipe:
This standard includes two different methods for the installation of polyethylene encasement.

1. Method A:
   a. Cut polyethylene tube to a length approximately 2 feet longer than the length of the pipe section. Slip the tube around the pipe, centering it to provide a 1 foot overlap on each adjacent pipe section, and bunching it accordion-fashion lengthwise until it clears the pipe ends.
   b. Lower the pipe into the trench and make up the pipe joint with the preceding section of pipe. A shallow bell hole must be made at joints to facilitate installation of the polyethylene tube.
   c. After assembling the pipe joint, make the overlap of the polyethylene tube. Pull the bunched polyethylene from the preceding length of pipe, slip it over the end of the new length of pipe, and secure in place with one circumferential turn of adhesive tape plus enough overlap to assure firm adhesion. Then slip the end of the polyethylene from the new pipe section over the end of the polyethylene from the new pipe section over the end of the first wrap until it overlaps the joint at the end of the preceding length of pipe. Tape it in place. Take up the slack width to make a snug, but not tight, fit along the barrel of the pipe, securing the fold at quarter points with adhesive tape.
   d. Repair any rips, punctures, or other damage to the polyethylene with adhesive tape or with a short length of polyethylene tube cut open, wrapped around the pipe, and secured with adhesive tape. Proceed with installation of the next section of pipe in the same manner.
2. Method B:
   a. Cut polyethylene tube to a length approximately 1 foot shorter than the length of the pipe section. Slip the tube around the pipe, centering it to provide 6 inches of bare pipe at each end. Make polyethylene snug, but not tight. Tape down and secure ends as described in B,1.
   b. Before making up a joint, slip a 3 foot length of polyethylene tube over the end of the preceding pipe section, bunching it accordion-fashion lengthwise. After completing the joint, pull the 3 foot length of polyethylene over the joint, overlapping the polyethylene previously installed on each adjacent section of pipe by at least 1 foot. Make snug,

tape down, and secure each end as described in B,1.

c. Repair any rips, punctures, or other damage to the polyethylene as described in B,1. Proceed with installation of the next section of pipe in the same manner.

C. Pipe-shaped appurtenances:
Bends, reducers, offsets, and other pipe-shaped appurtenances shall be covered with polyethylene in the same manner as the pipe.

D. Odd-shaped appurtenances:
Valves, tees, crosses, and other odd-shaped pieces which cannot practically be wrapped in a tube shall be wrapped with a flat sheet or split length of polyethylene tube. The sheet shall be passed under the appurtenance and brought up around the body. Seams shall be made by bringing the edges together, folding over twice, and taping down. Slack width and overlaps at joints shall be handled as described in B,1. Tape polyethylene securely in place at valve stem and other penetrations.

E. Openings in encasement:
Openings for branches, service taps, blow-offs, air valves, and similar appurtenances shall be made by making an x-shaped cut in the polyethylene and temporarily folding the fihm back. After the appurtenance is installed, tape the slack securely to the appurtenance and repair the cut as well as any other damaged areas in the polyethylene with tape.

F. Junctions between wrapped and unwrapped pipe:
Where polyethylene wrapped pipe joins a pipe which is not wrapped, extend the polyethylene tube to cover the unwrapped pipe a distance of at least 2 feet. Secure the end with circumferential turns of tape.

END OF SECTION

PART 1 - GENERAL

1.01 SECTION INCLUDES

A. Polyvinyl chloride pressure pipe required for project.

1.02 QUALITY ASSURANCE

A. Supervision:
1. Provide full time superintendent on the project who is qualified and experienced in the installation of P.V.C. pipe.
2. The superintendent shall direct all work in the execution of this portion of the work to insure proper and adequate installation.

B. Codes and standards:
Installation shall comply with the applicable specifications of the AWWA and manufacturer.

1.04 SUBMITTALS

A. Shop drawings:
Submit shop drawings to the Engineer within 30 days after award of Contract in accordance with Section 01340, showing all the plumbing system and plumbing materials to be furnished and installed.

B. As-built drawings:
During progress of the work, maintain an accurate record of all changes made in the plumbing installation from the layout and materials shown on the approved shop drawings.

PART 2 - PRODUCTS

2.01 FITTINGS FOR DIP, CIP, OR C900 PVC THAT IS DUCTILE IRON O.D.

A. Ductile Iron Fittings shall be "mechanical joint" conforming to ANSI A21.53 (AWWA C153).

B. Fittings on pipe thru 12 inch size shall be compact type conforming to AWWA C153. All other sizes shall be normal dimension.

2.02 PLASTIC PIPE - DUCTILE IRON O.D.

A. The pipe shall be produced according to AWWA C900 specification for Class 200 psi. The pipe shall be produced by an extrusion process using resin complying with ASTM Specifications D1784. Unless designated otherwise on the plans, the pipe shall conform to all the requirements of Specifications AWWA C900-81 with a standard dimension ratio of DR of 14 for barrel, bell or coupling. All pipe shall bear the AWWA seal of approval and designation. Certificates of compliance with these specs shall be furnished upon request.

B. Only elastomeric ring seals are to be used for joining pipes. Thrust blocks will be necessary at bends, tees, and reducers.

C. The elastomeric gaskets for plastic pressure pipe shall conform with the requirements of ASTM F477. The joint shall have been tested and approved by the National Sanitation Foundation and certification of said approval shall be submitted.

D. Prior to use, Engineer shall be given opportunity for examination and testing. Any pipe found to be injured, damaged or to have defects shall be removed. The pipe shall then be delivered along the line in which the pipe is to be laid. The pipe shall be handled in a manner as recommended by the manufacturer so that minimum damage results.

2.03 RESTRAINED JOINT PVC PIPE

A. Where restrained joint PVC is indicated on plan sheets, pipe shall be North American Specially Products Certa-LOK Tapered Bell Restrained Joint PVC Pressure Piping System, Aquamine, or approved equal. Restrained joint pipe shall meet the ASTM D22-41 Standard Specifications for Poly Vinyl Chloride (PVC), Pressure Rated pipe (SDR Series)."

B. Installation of pipe shall follow manufacturer's recommended procedure and is to be in accordance with Missouri Department of Natural Resources guidelines.

C. Restrained Joint pipe shall have the following:
1. DR 14, Class 305 psi pressure rating
2. Designed for permanent use

PART 3 - EXECUTION

3.01 INSTALLATION

A. Maximum allowable bends in PVC pipe:

The following table gives the maximum distance from the center line of any length of PVC pipe to a chord line from the center of the joints at either end (mid-ordinate distance).

Pipe Size	20 Ft. Length	40 Ft. Length
1 in.	1.0 ft.	4.0 ft.
2 in.	0.5 ft.	2.0 ft.
3 in.	0.33 ft.	1.33 ft.
4 in.	0.25 ft.	1.0 ft.
6 in.	0.16 ft.	.67 ft.
8 in.	0.125 ft.	
10 in.	0.10 ft.	
12 in.	0.082 ft.	

Bends greater than the above require fittings. Use long radius elbow bends where possible.

B. Plastic pipe shall be kept shaded and shall be covered with backfill immediately after installation. Pipe shall be installed in accordance with manufacturer's instructions.

No rock or debris shall be placed in trench within 6 inches of the pipe.

C. The interior of all pipe and fittings shall be thoroughly cleaned of all foreign matter before being installed and shall be kept clean until the work has been accepted. All joint contact surfaces shall be kept clean until the jointing is completed.

D. Every precaution shall be taken to prevent foreign material from entering the pipe while it is being installed. No debris, tools, clothing, or other materials shall be placed in the pipe.

E. Whenever pipe laying is stopped, the open end of the line shall be sealed with a watertight plug. All water that may have entered the trench shall be removed prior to removing the plug. It is essential that no mud, trench water, or other foreign matter be permitted to enter the pipe line at any time.

F. Pipe lines or runs intended to be straight shall be laid straight. Deflections from a straight line taken in joints or in pipe shall not be greater than that recommended by the pipe manufacturer.

G. Either shorter pipe sections, or special bends shall be installed where the alignment or grade requires them.

H. Pipe shall be protected from lateral displacement by means of pipe embedment material installed as provided in the trench backfill specification.

I. Under no circumstances shall pipe be laid in water and no pipe shall be laid under unsuitable weather or trench conditions.

J. Pipe shall be laid with the bell ends facing the direction of laying except when

making closures.

K. Mechanical joints shall be carefully assembled in accordance with the manufacturer's recommendations. If effective sealing is not obtained, the joint shall be disassembled, thoroughly cleaned and reassembled. Overtightening bolts to compensate for poor installation practice will not be permitted.

L. Boltless gasketed joints shall be assembled following all instructions and recommendations of the pipe manufacturer, relative to gasket installation and other jointing operations, and shall be observed and followed by the Contractor. All joint surfaces shall be lubricated with heavy vegetable soap solution immediately before the joint is completed.

3.02 CONNECTIONS WITH EXISTING PIPE LINES

A. Where connections are made between new work and existing piping, such connections shall be made using suitable and proper fittings to suit the conditions encountered. Each connection with an existing water pipe shall be made at a time and under conditions which will least interfere with water service to customers affected thereby, and as authorized by the Owner. Suitable facilities shall be provided for proper dewatering, drainage and disposal of all water removed from the dewatered lines and excavations, without damage to adjacent property.

B. Great care shall be taken to prevent pipe line contamination when dewatering, cutting into, and making connections with, existing pipe lines used for the conveyance or distribution of water for domestic or public use. No trench water, mud, or other contaminating substance shall be permitted to get into the connected line or lines at any time during the progress of the work. The interiors of all pipe, fittings, and valves, both new and re-used, installed in such connections, shall be thoroughly cleaned before installation.

3.03 REACTION ANCHORAGE AND BLOCKING

A. All unlugged bell and spigot or all-bell tees, Y-branches and bends deflecting 11-1/4 degrees or more which are installed in piping subjected to internal hydrostatic heads in excess of 15 feet in exposed, or 30 feet in buried, piping shall be provided with suitable reaction blocking, struts, anchors, clamps, joint harness, or other adequate means for preventing any movement of the pipe caused by unbalanced internal liquid pressure.

3.04 SEPARATION OF WATER MAINS, SANITARY SEWERS AND COMBINED SEWERS MoDNR

A. Parallel installation:

Water mains shall be laid at least ten feet horizontally from any existing or proposed sewer. The distance shall be measured edge to edge. In cases where it is not practical to maintain a ten-foot separation, the department may allow deviation on a case-by-case basis, if supported by data from the design engineer. Such deviation may allow installation of the water main closer to a sewer, provided that the water main is laid in a separate trench or on an undisturbed earth shelf located on one side of the sewer and on either case, at such an elevation that the bottom of the water main is at least 18 inches above the top of the sewer. In areas where the recommended separations cannot be obtained, either the waterline or the sewer line shall be constructed of mechanical joint pipe or cased in a continuous casing.

B. Crossings:
Water mains crossing sewers shall be laid to provide a minimum vertical clear distance of 18 inches between the outside of the water main and the outside of the sewer. This shall be the case where the water main is either above or below the sewer. At crossings, the full length of water pipe shall be located so both joints will be as far from the sewer as possible but in no case less than ten feet. Special structural support for the water and sewer pipes may be required. In areas where the recommended separations cannot be obtained either the waterline or the sewer line shall be constructed of mechanical joint pipe or cased in a continuous casing that extends no less than ten feet on both sides of the crossing.

C. Exception:
Any variance from the specified separation distances in paragraphs A and B must be submitted to the engineer for approval.

D. Force mains:
There shall be at least a ten-foot horizontal separation between water mains and sanitary sewer force mains and they shall be in separate trenches. In areas where theses separations cannot be obtained, either the waterline or the sewer line shall be cased in a continuous casing.

E. Sewer manholes:
No waterline shall be located closer than ten feet to any part of a sanitary or combined sewer manhole.

F. Disposal facilities:
No waterline shall be located closer than 25 feet to any on-site wastewater disposal facility, agricultural waste disposal facility, or landfill.

END OF SECTION

PART 1 - GENERAL

1.01 SECTION INCLUDES

A. Valves

B. Fire Hydrants

C. Valve Boxes

D. Related Items

1.02 RELATED SECTIONS

A. Section 02615: Water Mains - Ductile Iron Pressure Pipe

B. Section 02620: Water Mains - Polyvinyl Chloride Pressure Pipe

1.03 QUALITY CONTROL

A. Supervision:
Provide full time supervisor trained and familiar with the work to be undertaken.

B. Workmanship:
All workmen shall be skilled and experienced in the specified work.

1.04 SUBMITTALS

Shop drawings:
Submit shop drawings to the Engineer within 30 days after award of Contract in accordance with Section 01340.

PART 2 - PRODUCTS

2.01 VALVES

A. Gate valves 12 inches and smaller:
1. All gate valves shall comply with requirements of "Standard Specifications for Resilient Seated Gate Valves for Ordinary Water Works Service" AWWA C509 except as amended herein. All valves shall be resilient seated wedge type.

2. All gate valves unless noted otherwise on the plans shall have ends of standard mechanical joints conforming to ANSI/AWWA C111/A21.11. Flanged end valves shall conform to ANSI B16.1 Class 125.
3. All gate valves shall be mounted in the line in a vertical position unless noted otherwise on the plans.
4. All gate valves shall be provided with "O" rings for sealing of the valve stem.
5. All gate valves shall be equipped with 2 inch square operating nuts. Valves shall close on clockwise rotations.
6. All valves shall be designed for operation at a working pressure of not less than 200 psi.

2.02 FIRE HYDRANTS

A. All fire hydrants shall comply with requirements of "AWWA Standard for Fire Hydrants for Ordinary Water Works Service" C502 except as amended herein.

B. All hydrants shall have replaceable "breakable" sections. Hydrants shall be compression type closing with line pressure. Hydrants shall have inlet connection of 6 inch size with standard flange connection for direct bolting to auxiliary gate valve.

C. All hydrants shall have two hose outlets with National Standard 2-1/2 inch hose threads, and on 4-1/2 inch steamer connection with National Standard threads. Operating nut shall conform to National Standard measurements.

D. Valve opening shall be 5-1/4 inch.

E. Hydrant valve shall open on counter-clockwise rotation of the operating nut.

F. Hydrants shall be painted a finish coat of red above the ground line.

G. Burial depths for hydrants will and may vary, but shall not be less than 4 feet. The steamer connection shall not be less than 12 inches nor greater than 24 inches above finish grade. The contractor shall furnish and install all spool pieces as may be necessary to adjust hydrants to the proper height.

2.03 VALVE BOXES

A. Traffic areas:
Valve boxes shall be Clay & Bailey, or equal, three-piece, slip type 5-1/4 inch shaft for roadway service. Cover shall have the word "Water" cast on its top.

2.04 TAPPING SLEEVES

A. Tapping sleeves shall be as manufactured by the Mueller Co. or M & H Valve & Fitting Co. or approved equal, for 150 psi working pressure. Sizes and number shall be as indicated on the plans. Joints shall be mechanical joint suitable for the pipe to be tapped. Outlet shall be flanged ASA B 16.1.

B. Valves for tapping sleeves shall be as per 2.01 A in this section except that end connection shall be flanged and mechanical joint.

2.05 AIR RELEASE VALVES

A. The air release valve shall operate (open) while pressurized, allowing entrained air to escape from the water pipeline, pump or reservoir tank, thru the air release orifice. After entrained air escapes thru the air release orifice, the valve orifice shall be closed by a needle mounted on the compound lever mechanism, energized by a CONCAVE FLOAT to prevent water from escaping. The air release valve will then stay closed until more air accumulates in it and the opening cycle will repeat automatically.

B. The needle shall be Buna-N for tight shut-off and be resilient to prevent seepage due to pipeline or pump vibrations.

C. The air release valve compound internal level mechanism shall be all Bronze. All other internals must be stainless steel. The stainless steel float must be CONCAVE and sufficiently bouyant to operate water and be SPURT FREE.

D. The valve shall withstand 500 psi test pressure and have a 3/16 inch orifice for operating (opening) pressure up to 150 psi. The venting capacity @ 150 psi shall be 55 CFFAM.

E. Valve to be APCO Model 1 inch - 200A Air Release Valve, as manufactured by Valve & Primer Corporation, Schaumburg, Illinois, U.S.A.

2.06 LOCATOR WIRE/ACCESS TESTING PORTS

Locator wire shall be 12 AWG solid copper insulated wire or 12 AWG copperclap steel wire as manufactured by Copperhead Industries, LLC, or approved equal. Install wire in the trench with the main. All wire connections shall be Copperhead Snake Bite Connectors, dry conn direct bury lug or snake bite wire nuts, or approved equal.

Install access ports at 1,000 feet max. intervals as detailed on plans. All valves, air release vaults, hydrants, flushing assemblies and blow-offs shall have access ports as well as every 1,000 feet. Access port shall be Copperhead, LP Test services or above ground posts shall be "Internal Terminal Style" with standard board with two terminals. Post shall be Rhino TriView Flex Tracing Station Model TVTI 72-BB2 or equal.

Contractor to field verify continuity of wire between access ports after installation. Payment for locator wire will be subject to successful continuity test and report.

When directional drilling or boring is required, only Copperhead" Extra High Strength (EHS), #1245B with 45 mil High Density Polyethylene (HDPE) jacket with minimum 1150# break load, will be used.

2.07 SERVICE CONNECTIONS

A. Service pipe:
The pipe from the main to the meter holding device shall be 1-inch rigid plastic pipe SDR 13.5 for 315 pounds working pressure and shall conform to the preceding specifications for plastic pipe or polyethylene service tubing (ASTM). If polyethylene tubing is used, Ford No. 82 stainless steel insert sleeves shall be used on each pack joint end. All service line installed in highway right-of-way shall be type K copper and subject to approval by the MHTD.

B. Meter holding device:
1. The meter holding device shall provide a complete mounting for the installation of and the holding of the water meter so that the line of flow through the meter shall be 18 inches above the lower edge of the meter box.
2. The copper meter yoke shall be provided with an inverted ground key angle valve or shut-off valve on the inlet side. On the customer side of the setter, a check valve is to be serviceable, spring loaded and one seat of resilient material. Check valve shall be guaranteed and tested to withstand a vacuum or external pressure test of 10.8 psia (22 in Hg) for 1 hour with no leakage. Each end of the yoke shall be provided with a combination tailpiece with inside I.P. thread. The yoke shall provide a copper, brass, or bronze passage entirely through the meter box with the exception of the meter. The construction shall be such that the meter may be removed without removing the meter holding device, and the footing or the discharge leg of the yoke shall extend at least 18 inches from the centerline of the meter box. Setter shall have a pack joint for PVC on each end. The meter holding device shall be an A.Y McDonald Mfg. Co. #22-218WW2233 coppersetter, or approved equal.

C. Service saddle:
Service saddle for main line shall be A.Y McDonald Mfg. Co. #3892. Corporation stop shall be 3/4 inch male IPS by 3/4 inch tube compression

D. Service meter:
1. Meters furnished under these specifications shall be product of a manufacturer with at least 5 years experience in meter manufacturing for the American Water Works market. Meter shall utilize positive displacement measuring chamber for cold water service, of split-case design with provision for frost protection with a nutating disc. The nutating disc shall make no move than 50 oscillations per gallon.
2. Meters shall comply with A.W.W.A. Standard C700-95 for accuracy, capacity,

pressure loss and dimensions.

3. Meters may be either mechanically or magnetically driven with sealed registers. Meters with stuffing box, spindle and packing gland will not be acceptable.
4. Meters shall be readily adaptable to remote readout capability designed and manufactured for Badger meters.
5. Meters shall carry a minimum 5-year/750,000 gallons warranty against defective materials and workmanship and shall be Badger.
6. The body cases shall be of high quality bronze with the manufacturer's serial number imprinted thereon and have raised markings to indicate the direction of flow.
7. A hinged cover bearing the name of the manufacturer in raised letters shall be provided for the register glass. Thread protectors shall be supplied for the connection ends and the cases shall have provisions for wire sealing the meter body. Cases must be capable of withstanding working pressures of 150 psi.
8. Registers shall be straight-reading in U.S. Gallons, sealed to prevent fogging and to prevent fluid contact with water being measured and with provision for test reading the flow to within 0.1 gallon. Register components shall be constructed of corrosion resistant material. The meter shall flow 15 gpm continuously and have a normal flow range of ½-25 gpm.
9. Meter sball he 98.5%-101.5% accurate at ¼ gpm.
10. Meter shall have maximum pressure drop of 5 psi.
11. Meters shall have radio heads installed with them as manufactured by meter manufacturer and be compatible with existing radio read system.
    a. General:
        1) The encoder register will incrementally encode meter reading information and provide a digital signal to collection equipment. The register shall be permanently sealed in a glass and metal housing and constructed without the use of gaskets, available for pit and remote installations.

    b. Registration
        1) The register shall provide an active six-digit number wheel for visual registration.
        2) The register shall incrementally encode the seven most significant digits of the meter reading for digital transmission to the remotely located AMR device.
        3) Position based (absolute) encoders will not be allowed.
        4) The test circle must fill the entire face of the register and employ a full test sweep hand and have division gradients of 1/100th of the units of registration.
        5) The units of measure shall be in U.S. Gallons, Cubic Feet, or Cubic Meters an appear in a conspicuous place on the face of the register.
        6) The register face shall prominently display the date code of manufacture, month and year, and indicate the model of water meter it is matched width.
        7) Every register shall utilize a low flow indicator for leak detection

and shall display it in appropriate colors: red for U.S. Gallons, blue for Cubic Feet, and black for Cubic Meters.

c. Electrical Construction

1) The register shall be driven by an accurate, solid-state data collection technology such as the piezoelectric switch. The use of reed switches and/or weigand sensors will not be allowed.
2) The register shall provide digitally formatted data to the AMR device represent accurate meter information.
3) The register shall offer compatibility to other levels of AMR: radio frequency, telephone, close-proximity meter reading, low earth orbit satellite technologies.

d. Mechanical Construction

1) Materials used in the construction of the register shall be environmentally safe with potable water systems. Absolutely no oil is allowed in the registration device.
2) The register shall be constructed of a domed glass top and a copper bottom for maximum durability. No plastic tops or bottoms allowed.
3) The register must be permanently sealed to provide superior moisture resistance flooded pit or remote settings. The permanent seal between the glass and copper bottom shall utilize an adhesive seal without the use of gaskets. This adhesive seal shall have a leak rate not to exceed 1x10(-6) cc/sec when tested on a gas mass spectrometer. Absolutely no gasket seals will be allowed.
4) The register shall have a shroud assembly and lid that is factory installed. Disassembly of the shroud or lid from the register shall require special tools. Lids shall be constructed of plastic or bronze.
5) The register shall be attached to the water meter by bayonet connections. To ensure a high level of tamper resistance, a seal screw should be provided that effectively locks the register to the meter.
6) The register must be removable from the water meter without removing them from service.
7) The register must be factory prewired to pit and remote AMR devices requiring no wiring the field and available in a variety of wire lengths.
8) No connections between the register and AMR device will be allowed.

e. Warranty

1) The manufacturer must warrant the encoder register to be free form defects in materials and workmanship for a period of 10 years from date of shipment.

E. Meter box:
The meter box to be used on this project shall be of PVC Plastic, 18 inch in diameter and not less than 36 inches in length. Boxes shall be A2000 meter well as manufactured by Midwest, Inc.

F. Meter box cover:
1. The meter box covers shall be of cast iron construction of a good quality cast iron at least 50 percent of which shall be new pig. It shall be constructed to fit on the meter box with lugs extended into the box to prevent displacement of the cover. Cover shall be Clay & Bailey, D2210 with lifting lugs or approved equal.

2. The lid shall be held to the body with lugs and shall lock therein with a bronze or bronze-bushed worm lock. The box cover shall be not less than 4 inches high.

G. Cover:
The trench for service lines shall provide not less than 36 inches of cover and shall be not less than 6 inches in width.

H. Meter box location:
Excavation for the meter boxes shall be made at the location indicated by the Engineer.

I. Boring under street roadways for service connections:
Where it is necessary to go under streets and paved roadways with service connections, it will be accomplished by boring unless special permission for trenching is secured.

2.08 SERVICE RECONNECTIONS

A. Service pipe:
The pipe from the main to the reconnection point on the existing service shall be 3/4-inch rigid plastic pipe SDR 13.5 for 315 pounds working pressure and shall conform to the preceding specifications for plastic pipe or polyethylene service tubing (ASTM). If polyethylene tubing is used, Ford No. 82 stainless steel insert sleeves shall be used on each pack joint end. All service line installed in highway right-of-way shall be type K copper and subject to approval by the MHTD. This reconnection shall be made after potable water becomes available from the new main.

B. Service saddle:
Service saddle for main line shall be A.Y McDonald Mfg. Co. #3892. Corporation stop shall be 3/4 inch male IPS by 3/4 inch tube compression.

C. Service tap:
Service tap shall be completed by use of a drilling machine of specified size of ¾" or 1" drilling requirements.

D. Cover:
The trench for service lines shall provide not less than 36 inches of cover and shall be not less than 6 inches in width.

E. Boring under street roadways for service reconnections:
Where it is necessary to go under streets and paved roadways with service reconnections, it will be accomplished by boring unless special permission for trenching is secured.

2.09 CAP EXISTING SERVICE TAP

Materials:
Materials to be used to cap an existing service line connection on a main shall be a Smith-Blair 242 repair clamp with stainless steel bolt.

2.10 BLOW-OFF ASSEMBLIES

Blow-offs shall be non-freezing, self draining type with a 42" bury, blow-offs will be furnished with a 4" JM inlet, a non-turning operating rod and shall open to the left. All of the working parts shall be of bronze-to-bronze design, and be serviceable from above grade with no digging. Units shall operate with a standard 2" gate valve wrench. When open, valve shall be 100% unobstructed and drain hole shall be covered. The outlet shall be 4" FIP with plug and extend a minimum of 12" above the ground, as manufactured by Kupferle Foundry Co., St. Louis, Missouri Model No. 7500, or approved equal.

PART 3 - EXECUTION

3.01 VALVES AND VALVE BOXES

A. Valves and valve boxes shall be set plumb. Each valve box shall be placed directly over the valve it serves, with the top of the box brought flush with the finished grade. After being placed in proper position, earth shall be filled in around each valve box and thoroughly tamped for a distance on each side of the box of 4 feet at the top of the pipe and 2 feet measured at the top of the trench.

B. Each valve shall be inspected before installation to ensure that all foreign substances have been removed from within the valve body, and shall be opened and closed to see that all parts are in first-class working condition.

3.02 FIRE HYDRANTS

A. Hydrants shall be set at such an elevation that the minimum pipe cover is provided throughout the length of the branch supply line and that the nozzles are at least 12 inches and not more than 24 inches above the ground.

B. Each hydrant shall be set on a concrete foundation not less than 18 inches square and 6

inches thick. To prevent the hydrant from blowing off the supply connection, the bowl of each hydrant shall be blocked against the end of the trench with cast-in-place reaction blocking, or it shall be tied to the pipe with suitable rods or clamps.

C. Hydrant drainage shall be provided by installing around the hydrant, and below the top of the hydrant supply pipe, not less than 7 cubic feet of a mixture of two parts gravel or crushed stone retained on a 3/4 inch screen to one part of coarse sand.

D. All hydrants shall stand plumb. Hydrants with pumper nozzles shall have their hose nozzles parallel with, and the pumper nozzle perpendicular to, the curb line. Hydrants having hose nozzles 90 degree apart shall be set so that the line bisecting the angle between the nozzles is perpendicular to the curb line. Hydrants located behind curbs where the sidewalks extend close to, or abut against, the curb shall be set that no portion of the pumper or hose nozzle caps will be less than 6 inches nor more than 12 inches from the gutter face of the curb. Where set in a parking between the curb and sidewalk, or between the sidewalk and property line, no portion of the hydrant or nozzle cap shall be within 6 inches of the sidewalk.

D. Immediately before installation of a hydrant, the following operations shall be performed: (a) the hydrant shall be carefully inspected; (b) the hydrant interior shall be thoroughly cleaned; (c) the hydraut shall be opened and closed as many times as may be necessary to determine if all parts are in proper working order, with valves seating properly and the drain valve operating freely; and (d) the packing gland checked to determine if the packing is in place and the gland nut properly tightened.

END OF SECTION

PART 1 - GENERAL

1.01 SECTION INCLUDES

A. Testing of water lines, fire hydrants, and valves.

1.02 RELATED SECTIONS

A. Section 02221: Excavation, Trenching & Backfill

B. Section 02615: Ductile Iron Pressure Pipe

C. Section 02620: Polyvinyl Chloride Pressure Pipe

D. Section 02640: Valves, Hydrants, and Accessories

E. Section 02675: Disinfecting Water Mains

1.03 QUALITY CONTROL

A. Supervision:
Provide full time superintendent on the project who is qualified and experienced in testing procedures. Superintendent shall direct all work in connection with the testing.

B. Codes and standards:
Testing shall comply with AWWA C605-94 Section 7 - Hydrostatic Testing.

1.04 SUBMITTALS

A. Test reports:
Submit certified copies of test reports on each section of pipe tested.

PART 2 - PRODUCTS

None

PART 3 - EXECUTION

3.01 GENERAL

A. The Contractor shall provide all necessary piping connections, pumping equipment, pressure gauges, flow meters, and other equipment as necessary for the required test.

B. Pressure and leakage test may be coordinated with the disinfection of the pipeline, subject to conditions of Section 02675 - "Disinfecting Water Mains."

C. The Owner will furnish at the nearest available source, all water required for filling the lines and making the required test. The pipe shall be filled with water at a velocity not to exceed 1 foot per second. Air shall be expelled from pipe line during filling.

D. Where practical, pipelines shall be tested in lengths of not more than 1500 feet.

E. All pipe, fittings and other materials found to be defective, shall be removed and replaced with new materials by the Contractor.

F. All lines that fail to meet tests shall be repaired and retested as necessary until test requirements are complied with.

G. Testing prior to backfilling in no way relieves the Contractor of the responsibility of repairing leaks which become evident after the main is put into service or during the one-year guarantee period.

3.02 TESTING AFTER BACKFILL

A. If the Contractor chooses to test after backfilling, he shall comply with all requirements shown for testing before backfilling, except that the duration of the test shall be for 4 hours. All surface indications of leaks shall be immediately corrected even though the total leakage is less than allowed.

B. In the event the leakage is more than permissible, the system shall be corrected as found necessary to bring it within the allowed limits. It shall be subject to as many 4 hour tests as necessary to obtain the desired result. If a section of pipe fails the 4 hour test, then a 24 hour test may be required by the Project Engineer.

3.03 TESTING BEFORE BACKFILL

A. All backup blocks and anchors shall have been in place at least 48 hours prior to testing.

B. The test pressure shall be maintained for 2 hours or longer as is necessary for time to inspect the pipe line for visible leaks and as is required to obtain a reasonable time for leakage measurement.

3.04 PRESSURE TEST

A. Test pressure:
1. All newly installed piping shall be hydrostatic pressure tested at 80 percent of rated pressure for all PVC pipe and at 150 psi for all ductile iron pipe.
2. Pressure shall not vary by more than plus or minus 5 psi.
3. Pressurization:
   a. Each valved section of pipe shall be filled with water slowly and the specified test pressure, based on the elevation of the lowest point of the line or section under test and corrected to the elevation of the test gage, shall be applied by means of a pump connected to the pipe. Test shall begin after pipe is filled with water and the air expelled.

B. Air removal:
Before applying the specified test pressure, air shall be expelled completely from the pipe, valves, and hydrants. If permanent air vents are not located at all high points, the Contractor shall install corporation cocks at such points so that the air can be expelled as the line is filled with water. After all the air has been expelled, the corporation cocks shall be closed and the test pressure applied. At the conclusion of the pressure test, the corporation cocks shall be removed and plugged, or left in place at the discretion of the Owner.

C. Examination:
All exposed pipe, fittings, valves, hydrants, and joints shall be examined carefully during the test. Any damage or defective pipe, fittings, valves, or hydrants that are discovered following the pressure test shall be repaired or replaced with sound material and the test shall be repeated until it is satisfactory to the Owner.

3.05 LEAKAGE TEST

A. General:
A leakage test shall be conducted concurrently with the pressure test.

B. Leakage defined:
Leakage shall be defined as the quantity of water that must be supplied into the newly laid pipe, or any valved section thereof, to maintain pressure within 5 psi of the specified test pressure after the air in the pipeline has been expelled and the pipe has been filled with water.

C. Allowable leakage:

1. No pipe installation will be accepted if the leakage is greater than that determined by the following formula:

$$L = \frac{ND\,(0.08)P}{7400}$$

in which L is the allowable leakage, in gallons per hour; N is the number of joints in the length of pipeline tested; D is the nominal diameter of the pipe, in inches; and P is the average test pressure during the leakage test, in pounds per square inch gage.

2. The table below shows the allowable leakage in gallons per hour at 150 psi per 1000 feet in 18 foot nominal lengths. For 20 foot nominal lengths, multiply the leakage calculated from table by 0.9.

Pipe Size	Allowable Leakage
2	0.19
3	0.28
4	0.37
6	0.55
8	0.74
10	0.92
12	1.10
14	1.29
16	1.48
18	1.67
20	1.85
24	2.22

3. When testing against closed metal-seated valves, an additional leakage per closed valve of 0.0078 gallons per hour per inch of nominal valve size shall be allowed.
4. When hydrants are in the test section, the test shall be made against the closed hydrant.
5. All visible leaks shall be repaired regardless of the amount of leakage.

D. Acceptance of installation:

Acceptance shall be determined on the basis of allowable leakage. If any test of pipe laid discloses leakage greater than that specified, the Contractor shall, at his own expense, locate and repair the defective material until the leakage is within the specified allowance.

END OF SECTION

PART 1 - GENERAL

1.01 SECTION INCLUDES

A. Disinfecting water lines and determining the bacteriologic quality by laboratory test after disinfection.

1.02 RELATED SECTIONS

A. Section 02221: Water Mains - Excavation, Trenching, and Backfill

B. Section 02615: Water Mains - Ductile Iron Pressure Pipe

C. Section 02620: Water Mains - Polyvinyl Chloride Pressure Pipe

D. Section 02640: Water Mains - Valves, Hydrants, and Accessories

1.03 QUALITY CONTROL

A. Supervision:
Provide full time superintendent on the project who is qualified and experienced in disinfection procedures. Superintendent shall direct all work in connection with the disinfection.

B. Codes and standards:
Testing shall comply with AWWA C651-92 or latest revision thereto.

1.04 SUBMITTALS

A. Test reports:
Submit certified copies of test reports on each section of pipe tested.

PART 2 - PRODUCTS

2.01 CHLORINE

A. Calcium hypochlorite (70 percent available chlorine).

PART 3 - EXECUTION

3.01 FLUSHING

A. Water lines shall be flushed prior to disinfection at a velocity of not less than 2.5 feet per second.

B. Discharge point shall have adequate drainage to prevent flooding of surrounding area. Discharge point to be approved by Owner.

3.02 CHLORINE APPLICATION

A. Continuous feed method:

1. This method is suitable for general application.

TABLE 2

Chlorine Required to Produce 50 milligrams per liter Concentration in 100 feet of Pipe - by Diameter

Pipe Size in.	100 percent Chlorine lb.	1 percent Chlorine Solutions gal.
4	0.027	0.33
6	0.061	0.73
8	0.108	1.30
10	0.170	2.04
12	0.240	2.88
14	0.334	4.01
16	0.436	5.24
18	0.552	6.63
24	0.981	11.78
30	1.533	18.40

2. Water from the existing distribution system or other approved sources of supply shall be made to flow at a constant measured rate into the newly-laid pipeline. The water shall receive a dose of chlorine, also fed at a constant measured rate. The two rates shall be proportioned so that the chlorine concentration in the water in the pipe is maintained at a minimum of 50 milligrams per liter available chlorine. To assure that this concentration is maintained, the chlorine residual should be measured at regular intervals in accordance with the procedures described in the current edition of Standard Methods and AWWA M12 - Simplified Procedures for Water Examination.

3. In the absence of a meter, the rate may be determined either by placing a pitot gage at the discharge or by measuring the time to fill a container of known volume.
4. Table 2 gives the amount of chlorine residual required for each 100 feet of pipe of various diameters. Solutions of 1 percent chlorine may be prepared with sodium hypochlorite or calcium hypochlorite. The latter solution requires approximately 1 lb. of calcium hypochlorite in 8.5 gallons of water.
5. During the application of the chlorine, valves shall be manipulated to prevent the treatment dosage from flowing back into the line supplying the water. Chlorine application shall not cease until the entire main is filled with the chlorine solution. The chlorinated water shall be retained in the main for at least 24 hours, during which time all valves and hydrants in the section treated shall be operated in order to disinfect the appurtenances. At the end of this 24 hour period, the treated water shall contain no less than 25 milligrams per liter chlorine throughout the length of the main.

3.03 FINAL FLUSHING

A. After the applicable retention period, the heavily chlorinated water shall be flushed from the main until the chlorine concentration in the water leaving the main is no higher than that generally prevailing in the system, or less than 1 milligrams per liter. Chlorine residual determination shall be made to ascertain that the heavily chlorinated water has been removed from the pipe line. Heavily chlorinated water shall be de-chlorinated with sodium thiosulfate prior to discharge to the water course or sanitary/storm sewers.

3.04 BACTERIOLOGIC TEST

A. After final flushing, and before the water main is placed in service, a sample or samples shall be collected from the end of the line and tested for bacteriologic quality and shall show the absence of coliform organisms. If the number and frequency of samples is not prescribed by the public health authority having jurisdiction, at least one sample shall be collected from chlorinated supplies where a chlorine residual is maintained throughout the new main. From unchlorinated supplies at least two samples shall be collected at least 24 hours apart.

B. In the case of extremely long mains, it is desirable that samples be collected the length of the line as well as at its end.

C. Samples for bacteriologic analysis shall be collected in sterile bottles treated with sodium thiosulphate. No hose or fire hydrant shall be used in collection of samples. A suggested sampling tap consists of a standard corporation cock installed in the main with a copper tube gooseneck assembly. After samples have been collected the gooseneck assembly may be removed, and retained for future use.

3.05 REPETITION OF PROCEDURE

A. If the initial disinfection fails to produce satisfactory samples, disinfection shall be repeated until satisfactory samples have been obtained. When the samples are satisfactory, the main may be placed in service.

END OF SECTION

PART 1 - GENERAL

1.01 SECTION INCLUDES

A. Fertilizer.

B. Mulch.

C. Seed.

D. Preparation.

E. Maintenance.

1.02 RELATED SECTIONS

A. Section 02200: Excavation, Backfill, and Site Grading

1.03 ALTERNATE METHODS AND PRODUCTS

A. Alternate methods from those specified will be considered for use, provided that in the Engineer's opinion the end product will be equal to or exceed that which would result from the specified methods and products.

1.04 DEFINITIONS

A. Weeds:
Includes Dandelion, Jimsonweed, Quackgrass, Horsetail, Morning Glory, Rush Grass, Mustard, Lambsquarter, Chickweed, Cress, Crabgrass, Canadian Thistle, Nutgrass, Poison Oak, Blackberry, Tansy Ragwort, Bermuda Grass, Johnson Grass, Poison Ivy, Nut Sedge, Nimble Will, Bindweed, Bent Grass, Wold Garlic, Perennial Sorrel, and Brome Grass.

1.05 REGULATORY REQUIREMENTS

A. Comply with regulatory agencies for fertilizer and herbicide composition.

1.06 QUALITY ASSURANCE

A. Provide seed mixture in containers showing percentage of seed mix, year of production, net weight, date of packaging, and location of packaging.

1.07 MAINTENANCE DATA

A. Submit maintenance data for continuing Owner maintenance.

B. Include maintenance instruction, cutting method, maximum grass height, types, application frequency, and recommended coverage of fertilizer.

1.08 DELIVERY, STORAGE, AND HANDLING

A. Deliver grass seed mixture in sealed containers. Seed in damaged packaging is not acceptable.

B. Deliver fertilizer in water proof bags showing weight, chemical analysis, and name of manufacturer.

PART 2 - PRODUCTS

2.01 AGRICULTURAL LIMESTONE

A. Shall be agricultural limestone with not less than 90 percent passing the No. 4 sieve and containing not less than 40 percent calcium carbonate equivalent. Lime shall be applied at the rate recommended by soil test.

2.02 FERTILIZER

A. Shall be a standard commercial product which when applied at the proper rate will supply the equivalent quantity of total nitrogen, available phosphoric acid and soluble potash specified. Fertilizer shall be delivered to the site in bags or other suitable containers, each fully labeled, conforming to applicable state fertilizer laws, and bearing the name, trade name or trademark, and warranty of the producer.

B. Requirements per acre:
   1. Six hundred pounds of 17-17-17 grade fertilizer or equivalent.

2.03 MULCH

A. Shall be vegetive mulch consisting of cereal straw from stalks of oats, rye, wheat or barley. Straw shall be free of prohibited weed seeds as stated in State Seed Law and shall be relatively free of all other noxious and undesirable seeds. Straw shall be clean and bright, relatively free of foreign material and be dry enough to be spread properly.

2.04 SEED

A. Seed shall be a mixture with the specified minimum purity and germiuation requirements, as follows:

Seed Type	% Mix (By Wt.)	Purity %	Germination %
Kentucky K-31 Fescue	52	97	85
Creeping Red Fescue	18	85	80
Rye Grass	8	98	85
Rye Grain	22	-	-

Variation in the above mix to suit local conditions or time of year may be required.

B. Seed shall be labeled in accordance with USDA regulations. Care shall be taken during transportation to avoid segregation of seed mixtures.

C. Seed shall be sown at a rate of 217 pounds of seed mix per acre for drill seeding. Seed mixture shall be thoroughly mixed prior to application.

PART 3 - EXECUTION

3.01 GENERAL

A. The application of fertilizer, seed, and mulch shall follow each other in successive sequence as closely as possible. Seeding shall be accomplished in the first of the following two periods after completion of earthwork.

February 15 to May 1st
September 1st to October 1st

B. Seeding outside the specified seeding periods may be permitted at the Engineer's option, provided the Contractor is willing to make appropriate modifications to his seeding operations, and will guarantee the crop.

3.02 INSPECTION

A. Contractor must request that Engineer inspect site grading, clean-up and surface preparation to determine if site is ready for the seeding, fertilizing and mulching operations.

B. Upon Engineer's approval operations may begin.

3.03 SURFACE PREPARATION

A. Immediately in advance of fertilizing, the surface to be seeded shall be repaired, if necessary, to eliminate all damage from erosion or construction operations. The surface shall then be loosened and thoroughly pulverized by discing, harrowing and raking or other approved methods, to such an extent that it is free from sod, stones, clods, or roots. All growth of vegetation that will seriously interfere with planting operations shall be removed and disposed of as directed. The final surface shall be smooth and uniform, and left in such a condition as to prevent formation of low places and pockets.

3.04 FERTILIZING

A. Fertilizer and lime shall be dressed evenly over the areas to be seeded using approved mechanical type spreading equipment.

B. Fertilizer and lime after spreading shall be immediately incorporated into the soil to a depth of approximately 2 inches, by chisel, spike tooth harrow, or other approved methods.

3.05 SEEDING METHODS

A. General methods:
The Contractor shall employ a satisfactory method of sowing by use of either approved mechanical hand seeders or mechanical power-driven drills. When delays in operation carry the work beyond the specified planting seasons, or when conditions are such that by reason of drought, high winds, excessive moisture, or other factors, satisfactory results are not likely to be obtained, seeding shall stop. It will be resumed only where the desired results are probable or when approved alternate procedures have been adopted.

B. Broadcast seeding:
When broadcast seeding is utilized, the seed shall be uniformly broadcast by mechanical hand seeder, in two directions at right-angles to each other and at 1/2 of the specified rate per acre in each direction. After the seed is broadcast it shall be covered by an approved method to a depth of 1/3 inch to 3/4 inch. Broadcast seeding shall not be done in windy weather.

C. Drill seeding:
When drilling is utilized, it shall be done with approved equipment best suited to perform the work under prevailing conditions. The seed shall be uniformly drilled to a depth of one-third (1/3) inch to three-fourths (3/4) inch at the rate per acre specified. Drill seeding may be required in windy weather.

D. Prior to start of seeding, the Contractor shall demonstrate that the application of seed is being made at the specified rate. A final check of the total quantity of seed used shall be made against the area seeded. If the check shows that the Contractor has not applied seed at the specified rate, he shall uniformly distribute seed at a rate calculated to meet the

shortage.

E. The Contractor shall maintain the seeded areas until all fertilizing, seeding and mulching is complete and the work accepted by the Engineer. Areas damaged from the Contractor's own operations shall be repaired at his expense. After acceptance of the work the Contractor will not be held responsible for erosion due to weather, or conditions not due to the Contractor's own operations or negligence. The Contractor is not required to guarantee a crop, if seeding is done during the specified seeding periods.

3.06 MULCHING

A. Immediately after seeding, the Contractor shall apply vegetative mulch at a rate between 1-1/2 and 2-1/2 tons per acre to all seeded areas. Quantity of mulch shall be adjusted within the above limits, as directed by the Engineer, to the particular area or slope being mulched. Total application of mulch for the project shall average approximately 2 tons per acre. Mulch shall be applied by mechanical mulch spreaders equipped to eject by means of a constant air stream controlled quantities of the vegetative mulch.

B. Mulch shall be embedded by a disc type roller having flat serrated discs spaced not more than 10 inches apart, with cleaning scrapers for each disc.

C. Where indicated, or in areas of the project where soil conditions are not suitable for satisfactory crimping, asphalt emulsion shall be applied with the mulching operation. The normal rate of application shall be 100 gallons per ton of straw; however, this rate may be varied as directed by the Engineer to suit the particular area or slope conditions.

D. All mulch shall be distributed evenly over the areas to be mulched within 24 hours after the seeding operation. Following the mulching operation, suitable precautions shall be taken to prohibit traffic over mulched areas. Displaced mulch shall be replaced immediately, including repair of the underlying seed bed, if damaged as well.

3.07 MAINTENANCE

A. The Contractor shall maintain all seeded areas until the grass is properly established (not less than 90 days) until satisfactory development. Maintenance shall be continued until final acceptance of the work.

B. Maintenance of seeded areas shall include protecting, watering, mowing, fertilizing, and such other work as may be necessary to establish a permanent lawn. The Contractor shall reseed those seeded areas in which a satisfactory growth is not obtained, and shall refill any areas which become eroded prior to final acceptance of the work.

C. Paved areas shall be kept clean while maintenance operations are in progress.

3.08 REPLACEMENT

A. The Contractor shall replace all trees, shrubs, and flowers damaged by construction activities in the areas designated on the construction plans. The replacement trees and shrubs shall be equal in size to the damaged or removed specimen.

END OF SECTION

PART 1 - GENERAL

1.01 SECTION INCLUDES

A. Cast in place concrete.

1.02 QUALITY CONTROL

A. Supervision:
1. Provide full time superintendent on the project who is qualified and experienced in concrete construction. Superintendent shall direct all work in connection with concrete construction.
2. Finishers shall be journeymen concrete finishers experienced in concrete finish work.

B. Codes and standards:
Work covered by this specification shall be as specified herein and as specified in "Building Code Requirements for Structural Concrete", ACI 318 (latest revision).

1.04 TESTING

A. Laboratory and field testing shall be made on all concrete material including compression yield, air content, and slump test to the following ASTM Test and Specifications.
1. ASTM C31: Making and Curing Concrete Compressive and Flexural Strength Test Specimens in the Field.
2. ASTM C33: Specification for Concrete Aggregate.
3. ASTM C39: Test for Compressive Strength of Cylindrical Concrete Specimens.
4. ASTM C87: Test for Effect or Organic Impurities in Fine Aggregate on Strength of Mortar.
5. ASTM C143: Test for Slump of Portland Cement Concrete.
6. ASTM C15: Specification for Portland Cement.
7. ASTM C172: Sample Fresh Concrete.
8. ASTM C231: Test for Air Content of Freshly Mixed Concrete by Pressure Method.
9. ASTM C260: Specification for Air Entraining Admixtures for Concrete.
10. ACI 211-1-70: Recommended Practice for Selecting Proportions for Normal Weight Concrete.
11. ACI 214-65: Recommended Practice for Evaluation of Compression Test Results of Field Practice.

B. Concrete test cylinders shall be made at the job site by the Contractor. Concrete sample shall be taken from concrete being placed. Four cylinders shall be made for each pour over 5 cubic yards. Two cylinders shall be made for each pour for minor structural concrete as manholes, walks, etc.

Identify test cylinders to area concrete was placed. Cure cylinders same as job concrete.

Deliver three cylinders at 4 days. Test one at 7 days, moist cure other and test two at 28 days. Hold fourth cylinder for backup. Job cylinder tests are the basis for acceptance of concrete.

C. Air content shall be measured at the job site by the pressure method ASTM C231. Each test shall be recorded and identified to area concrete was placed. Test results shall be submitted to the Engineer. Air tests shall be made for all pours over 5 cubic yards and as directed by Engineer.

D. Slump test shall be made on all concrete pours. Each test shall be recorded and identified to area concrete was placed. Test results shall be submitted to the Engineer.

1.05 SUBMITTALS AND CERTIFICATES

A. Contractor shall submit name and location of transit mix company for approval.

B. Submit complete laboratory testing data on aggregate gradation, deleterious substances, and durability of mix additives and cement.

C. Delivery tickets shall be required with each load indicating mix design and information listed under ASTM C94-16.

1.06 PRODUCT HANDLING

A. Transit mix:
Concrete shall be handled and preserved in its "batched" proportion during transportation. Mixing time shall not exceed 45 minutes.
Concrete improperly cared for or mixed in the truck longer than 45 minutes shall be disposed of away from the project. Water shall not be added at anytime during transit or at the job site.

B. Defective concrete:
Damaged or defective concrete shall be repaired or removed and replaced immediately as directed by the Engineer.

C. Batch adjustment:
Cement, aggregate, or water, shall not be added to the truck after batching in an attempt to adjust slump or other batch characteristics.

PART 2 - PRODUCTS

2.01 STRUCTURAL CONCRETE

A. General:

1. All concrete used in the project shall be furnished by a reputable permanent concrete plant using transit mix trucks. The plant shall be located within a reasonable distance from the project so travel time is 30 minutes or less. Supplier shall have adequate bins that weigh material by approved scale system. The supplier shall have an adequate number of modern trucks to ensure delivery of concrete as reqnired for placing schedule. Supplier shall be subject to approval of the Engineer.
2. The Contractor shall use whatever means necessary to ensure concrete delivered to the project is properly batched with approved kinds and quantities of materials.
3. All admixtures used in concrete mix shall contain no chlorides.

B. Cement:

All cement shall be Type I Portland cement conforming to ASTM Cl50.

C. Fine aggregate:

1. Fine aggregate shall consist of natural sand conforming to ASTM C33. Sand shall be well graded, washed, and shall conform to the following sieve analysis:

Sieve Size	Percent Passing
1/2 inch	100
3/8 inch	99-100
No. 4	95-100
No. 8	85-95
No. 16	60-85
No. 30	30-60

Sieve Size	Percent Passing
No. 50	10-30
No. 100	0-5

2. The sand shall not have more than 35 percent retained between any two consecutive sieve sizes. Fineness modules shall not be less than 2.5 nor more than 3.1.
3. The amount of deleterious substances in fine aggregate, each determined on independent samples complying with the grading requirements of Division 3, shall not exceed the following limits:

4. Table 1. - Limits for Deleterious Substances in Fine Aggregate for Concrete:

Item	Maximum percent by Weight of Total Sample
Clay Lumps	0.25
Material Finer than No. 200 Sieve	2.00
Coal & Lignite	0.06
Sticks, Leaves & Other Deleterious Material	0.25

5. Fine aggregate shall be free of injurious amounts of organic impurities. Except as herein provided, aggregates subjected to ASTM test No. C40-56T for organic impurities and producing a color darker than the standard shall be rejected.
6. Fine aggregate shall be free of material that could react harmfully with alkalies in the cement. If such materials are present in injurious amounts, the fine aggregate shall be rejected, or shall be used with cement containing less than 0.6 percent alkali calculated as sodium oxide or with the addition of a material that has been shown to inhibit undue expansion due to the alkali-aggregate reaction.
7. Except as provided above, fine aggregate subjected to five cycles of the soundness test (ASTM C88-59T), shall show a loss, weighted in accordance with the grading of a sample complying with the limitations set forth above, not greater than 10 percent when sodium sulfate is used or 15 percent when magnesium sulfate is used.

D. Coarse aggregate:

1. Coarse aggregate shall be crushed limestone having an established history of sound material conforming to ASTM C33 and shall be approved by the Engineer. Furnish soundness test results for approval of source. Coarse aggregate source shall not contain chert deposits.

Gradation

Sieve Size	Percent Passing
1½ inch	100
1 inch	95-100
1/2 inch	25-60
No. 4	0-10
No. 8	0-5

2. Satisfactory experience record shown for durability, otherwise pass soundness test ASTM C88-5 cycles using magnesium sulfate without splitting or losing more than 15 percent weight.
3. Contractor shall arrange and pay for testing if adequate history is not available.

E. Water:

1. Water for mixing and curing concrete shall be clean, and free from injurious amounts of sewage, oil, acid, alkali, salt, or organic matter. Only potable water shall be used.

F. Concrete mix:

1. All concrete for the project shall conform to the design mix listed in the table below. The concrete mix shall include water reducing agent and air entrainment of 6 percent air plus or minus 1.5 percent. Twenty-eight day design strength shall be 4500 psi. The total aggregate volume is based on 60 percent coarse aggregate and 40 percent fine aggregate by volume. In the event the percentage of fine aggregate is increased, the amount of cement shall be increased as directed to provide equivalent strength.

Maximum aggregate size	- 1 inch
Maximum water	- 250 lb/cy
W/C weight ratio (maximum)	- 0.410
Cement	- 6.49 sacks/cy
Fibrous concrete reinforcement	- 1.5 lbs./cy

2. The supplier may submit complete data mix to accomplish the above design with which he has had a history of success for the Engineer's approval. The Contractor shall furnish laboratory design mix for the approved materials if a "history" mix is not available.
3. Water reducing agent shall conform to ASTM C-494, Type A. Acceptable agents include Euclid "Eucon WR 91" or "Eucon MR"; Grace "WRDA with Hycol" or "Daracem 65"; Masterbuilders "Pozzolith" or "Polyheed 997"; or approved equal.
4. Air entraining agent shall conform to ASTM C-260. Acceptable agents include Euclid "Air Mix 250"; W.R. Grace "Daravair 1000"; Masterbuilders "Microair" or "AE90", or approved equal. Proportions shall be a prescribed by the manufacturer and testing laboratory.
5. All admixtures shall be the product of a single manufacturer.

2.02 CURING MEMBRANES AND JOINTS

A. Curing membranes:

Curing membranes shall be 6 mil clear sheet polyethylene, Vis-Queen or equal.

PART 3 - EXECUTION

3.01 GENERAL

A. Inspection:
Inspect all work of other trades to ensure installation is complete and ready for concrete placement. Verify all items are in place.

B. Conflicts:
Consult Engineer in case of conflict between placing and other equipment or material.

3.02 PREPARATION

A. General:
1. Clean all forms and correct all fine grade damage.
2. Wet down all subgrades.
3. Verify all needed equipment for placing concrete is on hand: vibrators, crane or pump, tremies, flumes, finishing equipment.
4. All keyways are to be in place.
5. Dry up excavation if any water is present.
6. Have cold weather equipment on hand if applicable.
7. Notify Engineer at least 48 hours in advance of placing concrete.

3.03 PLACING OF CONCRETE

A. General:
1. Only those methods and arrangements of equipment shall be used which will reduce to a minimum any segregation of coarse aggregate from the concrete.
2. Sufficient capacity of manpower and placing equipment shall be provided so that the work may be kept free from cold joints and other defects in the finished product.
3. Concrete shall be deposited into the forms or on the grade as nearly as practicable in its final position, and in such manner that the concrete will completely fill the forms.
4. Vibration shall not be used to move concrete in a horizontal direction after initial placement.
5. Placement of concrete on a slope shall begin at the lower end of the slope and progress upward.
6. Concrete that has partially hardened or has been contaminated by foreign material shall not be deposited in the work, but shall be discarded.
7. Inclined chutes beyond the mixer chute shall not be permitted. Only concrete pumps or crane with concrete bucket will be approved method of placing concrete beyond chutes on mixers.
8. No water shall be added to the concrete, for any reason, at the job site.

9. Care shall be taken to fill the forms and to finish the concrete so the top surface is true to line and grade.
10. Concrete shall not be placed on muddy or frozen ground.
11. Dry subgrade shall be wetted in advance of concrete placement.
12. Care shall be taken to assure proper concrete coverage of reinforcing steel and mesh, as designed.
13. Care shall be taken to maintain the proper location of all joint material, dowels, embedded items, etc., during concrete placement.
14. No mud or other foreign materials shall be tracked into the concrete during placement operations, and all contaminated concrete shall be removed.
15. Laitance or soft layers of mortar shall be removed from the top or face of previously hardened concrete prior to placing additional concrete in contact with the surfaces.
16. Immediately before placing concrete walls. Concrete fill shall be placed on top of the previously placed concrete.
17. Extreme care shall be taken to avoid damage to surfaces of forms for all exposed concrete work.
18. Keyway shall be clean with no standing water.

B. Footings:
1. Concrete shall not be placed on frozen, muddy or spongy base.
2. All mud, free-standing water, loose dirt and debris shall be removed prior to placement of concrete.
3. Placement operations shall be performed in such manner as to prevent loose earth falling into footing area during placement of concrete.

C. Slabs:
1. Strike-off screeds shall be set to proper grades for all concrete slab construction, and the tolerance for screeds for smooth finish slabs shall not exceed 1/8 inch plus or minus in a distance of 7 feet.
2. Strike-off shall be accomplished by use of a straight edge of adequate weight and length.
3. Vibrating screeds, or other approved strike-off methods, shall be used when concrete slump is less than 3 inches and slab thickness is more than 4 inches.

D. Vibrating:
1. Mechanical internal vibrators shall be used whenever possible in all formed concrete work.
2. Vibrators shall be inserted at uniform spacing of 12 to 20 inches to assure thorough consolidation of all concrete.
3. Vibrators shall be inserted and withdrawn vertically, to a depth which will assure penetration into the previous lift, with vibration periods of from 5 to 15 seconds.
4. Form vibration and hand spading will be required at points inaccessible for thorough internal vibration.
5. During placement of concrete, stand-by vibrators shall be immediately available in the event of mechanical failure in the vibrators being used.

E. Maximum acceptable slump for all structural concrete shall be 3 inches (± 1 inch).

F. Cold weather requirements:
1. Do not place concrete on ice or frozen subgrade.
2. Concrete ingredients shall be heated when the air temperature is below 40 degrees F or forecast to drop below that temperature within 24 hours of the time concrete is to be placed.
3. Heating shall be accomplished by heating either the aggregate or the mixing water, or both. Maximum temperature of the water or aggregates shall be 150 degrees F.
4. Temperature of concrete at time of delivery shall be not less than 60 degrees F nor greater than 80 degrees F.
5. During placing and finishing, concrete shall be maintained at a temperature of 50 degrees F or above, but not more than 80 degrees F.
6. During placing and finishing, the concrete shall be protected from wind to prevent loss of heat and rapid drying.
7. Heating of enclosures for flat slab finishing shall be done by vented heating methods. Open flame heating will not be permitted.
8. Adequate facilities shall be provided prior to beginning concrete placement, for maintaining the ambient air temperature at the surface of the concrete or forms at 70 degrees F for 5 days.
9. Protective measures shall be maintained for at least 4 days beyond the heating period, to prevent sudden cooling of the concrete. During this time, the concrete shall not be allowed to drop in excess of 20 degrees F in any 24 hour period with a minimum temperature of 40 degrees F.
10. Newly finished flatwork shall be covered and protected for at least 14 days against exposure to rain, snow, sleet, and ice.
11. During the entire protection period adequate means shall be provided to prevent loss of moisture from the concrete surface.
12. All methods for protecting and heating concrete shall be subject to approval of the Engineer.
13. See Part 3.05 for curing requirements.

G. Hot weather requirements:
1. Concrete exposed to direct weather shall not be placed at temperatures above 100 degrees F.
2. Temperature of concrete when placed shall not exceed 85 degrees F.
3. In dry, hot or windy weather, sunshades and wind breakers shall be required during finishing operations.
4. As soon as practicable without damage to the surface finish, all exposed concrete shall be covered and kept continuously wet. Maintain concrete below 100 F.
5. See Part 3.05 for curing requirements.

3.04 FINISHING CONCRETE

A. General:
1. All slabs, walks, and decks shall be sloped uniformly to drain to floor drains or to finish grade, and shall drain completely without ponding water.

2. Finish shall be of specified texture and uniform in color and appearance. Approval of each type of finish is required on 4 foot square test panels. Test panels shall be located in protected area away from actual project. Test panels shall be made and approved prior to first concrete placement.
3. All voids in slabs and horizoutal surfaces are to be filled during finishing operation. Voids in formed surfaces are to be repaired immediately at the time forms are removed.
4. Avoid over finishing, late finishing, rewatering, and other techniques that may cause "crazing."
5. Provide adequate manpower and equipment for finishing prior to placing concrete.
6. Initiate curing process as soon as surface strength will permit.

B. Slabs and footing surfaces:
Finish shall be a broom finish. Finish preparation shall be the same as the basin floor slabs. Finish with a steel trowel to produce dense surface then texture with a hair broom to produce non-skid surface. Texturing shall be uniform, single stroke, perpendicular to walls, or parallel to slope direction.

3.05 CURING

A. General:
1. All concrete shall be continuously moist cured a minimum of 5 days after placing and finishing or 5 days after repairing.
2. Protect all concrete surfaces from damage during and after curing period.

B. Horizontal surfaces:
1. Cover with 6 mil polyethylene sheet. Lap edges 6 inches and seal. Hold in place with 2 by 4's at 4 foot centers or similar method. Placement shall not let air circulate under sheets.
2. Place polyethylene sheets as soon as finish can be walked on without damage. Sheets must be in place within 6 hours after finish.
3. Leave polyethylene sheets in place 5 days.

C. Formed surfaces:
1. Forms are adequate if left in place 5 days.
2. Cover top as described in B above.
3. If forms are removed to "stone" finish or repair concrete, moisten surface and completely cover with 6 mil polyethylene sheets. Anchor in place.

3.06 DEFECTIVE WORK

A. General:
1. Defective concrete work shall be removed and replaced immediately.
2. Work built outside tolerances listed in Section 03100 shall be considered defective.

3. Concrete of inadequate strength or having surface conditions indicating poor durability such as crazing, severe "map cracking," crumbling, or other evidence shall be considered defective.
4. Engineer shall be notified immediately when such conditions become apparent.

B. Repairing:
1. Repairing of minor faults such as small "honeycomb" areas and voids may be patched. Repairs shall be made as described in 3.04D above.
2. Cure patched areas 5 days.

3.07 SPECIAL CONSTRUCTION

A. Pipe supports:
1. Provide concrete pipe supports for all piping located 3 feet or less above floor. Form supports for neat appearance.
2. Provide inserts in concrete for pipe hangers.

B. Equipment bases:
Construct concrete bases for all equipment unless otherwise called for on the plan. Grout for solid bearing with non-shrinking grout. Grout shall be thoroughly mixed with the minimum water needed to produce flowable grout. Concrete base shall be saturated with water for at least 24 hours prior to grouting. Fill all void space. Minimum grout thickness shall be 1 inch. Finish edge of base plate grout vertically unless special requirements exist. Keep damp and covered for 5 days.

C. Anchor bolts:
The Contractor shall place anchor bolts, sleeve inserts, etc. required for all items of construction and equipment on the project prior to concrete placement. Care shall be exercised to set all anchors accurately.

END OF SECTION

CONSTRUCTION STANDARDS

GENERAL NOTES:

1. The Contractor shall verify the location and depth of all utilities prior to construction.

2. On Missouri projects, Contractor is to call 1-800-DIG-RITE to request utility locations to be marked at site(s) of proposed excavation.

3. Prior to commencement of work, the Contractor shall notify all those companies which have facilities in the vicinity 72 hours prior to the construction to be performed.

4. Contractor is to coordinate with Owner prior to connection to existing waterlines. Where interruption of facilities are necessary the Contractor is to plan his work in cooperation with Owner personnel for the least possible disruption of service. Night or weekend work may be necessary. If system operation must be suspended because of the Contractor's work, he shall have all necessary materials and equipment on hand, and have ample force available prior to beginning the work.

5. All work on Road/Street right-of-way shall be coordinated and in compliance with the applicable controlling authority. This includes traffic control as required.

6. Contractor is to coordinate w/property owners prior to any temporary closing of drives and/or parking areas.

7. Waterline shall be installed a minimum of 42" (inches) below surface of ground.

8. All Street and Private property monuments shall be protected.

9. All structures, fences, pavement, driveways and other improvements disturbed by construction activities shall be restored by the Contractor to condition equal or better than pre-construction condition.

10. When waterline crosses over or under other utilities, Contractor is to supply and fill 18" void between waterline and other utilities with crushed rock.

11. Waterline is to be installed with a minimum of 10' horizontal clearance from any force main or sewer line.

12. Locations of waterlines, and utilities shown are approximate only, and should be verified by Contractor prior to construction.

13. Backfill all driveway crossings with $\frac{3}{4}$" type I rock. Resurface drives with material to match existing type and thickness. Culvert shall be replaced and ditches graded to drain.

14. Contractor to review and adhere to all provisions on easements, if any, provided to Contractor by Owner.

LARKIN
LAMP RYNEARSON
9200 Ward Parkway, Suite 200 816.361.0440 | P
Kansas City , Missouri 64114 816.361.0045 | F
www.LRA-Inc.com / www.larkin-grp.com

drawn by	designed by	reviewed by	project - task number	date		revisions
AJM	CAH	CAH	0313045	2014	STANDARDS	

path\filename L:\0313045 Peculiar MO Water System Study\DRAWINGS\MISC\STANDARDS.dwg

Note:
Construct thrust block at all fittings and hydrants.

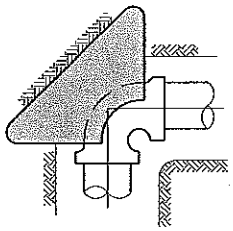

90° BEND

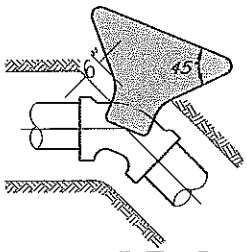

45° BEND OR LESS

Note:
Vertical face of bearing on earth to be symmetrical about plane formed by ℄'s of intersecting pipe alignments.

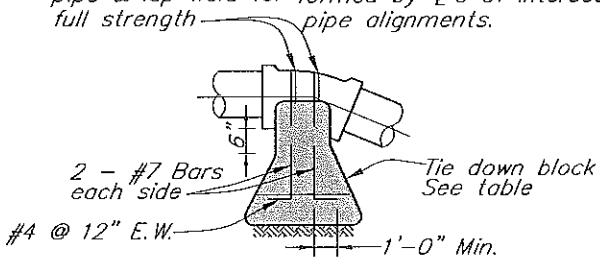

CONCRETE TIE DOWN BLOCK

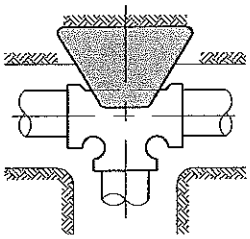

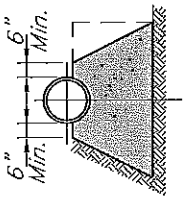

TEE TYPICAL SECTION

Each block shall have same area of bearing surface as called for in table for tee

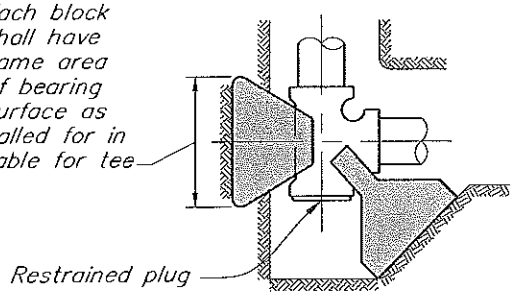

PLUGGED TEE

REQUIRED THRUST BLOCK AREA OF BEARING IN SQUARE FEET BETWEEN CONCRETE AND UNDISTURBED TRENCH WALL

PIPE SIZE	24"	20"	18"	16"	14"	12"	10"	8"	6"	2"–4"
90° BEND	64	44	36	28	22	16	11	7	4	2
45° BEND	35	24	19	15	12	9	6	4	2	1
22 1/2° BEND	18	12	10	8	6	4	3	2	1	1
11 1/4° BEND	9	6	5	4	3	2	1½	1	1	1
TEE	45	31	25	20	15	11	8	5	3	1½

Note:
Calculations based on working pressure of 150 psi and soil bearing capacity of 1500 psf.

REQUIRED CUBIC FEET OF CONCRETE FOR TIE DOWN BLOCKS

BEND	PIPE SIZE									
	24"	20"	18"	16"	14"	12"	10"	8"	6"	2"–4"
90°	680	470	380	300	230	170	120	75	42	16
45°	480	330	270	210	160	120	85	53	30	11
22 1/2°	260	180	145	115	90	65	45	29	16	6
11 1/4°	130	90	75	60	45	35	23	15	8	3

Note:
Calculations based on working pressure of 150 psi, unit weight of concrete of 150 psf and a safety factor of 1.5.

THRUST BLOCK DETAILS

Scale: Not to scale

LARKIN
LAMP RYNEARSON
9200 Ward Parkway, Suite 200 816.361.0440 | P
Kansas City , Missouri 64114 816.361.0045 | F
www.LRA-Inc.com / www.larkin-grp.com

drawn by	designed by	reviewed by	project - task number	date		revisions
AJM	CAH	CAH	0313045	2014	STANDARDS	

path\filename L:\0313045 Peculiar MO Water System Study\DRAWINGS\MISC\STANDARDS.dwg

Notes:

A. Flowing streams.

A minimum cover of four feet shall be provided over the pipe. When crossing water courses are greater than 15 feet in width, the following shall be provided.

1. The pipe shall be of special construction, having flexible watertight joints. Steel or ductile iron ball-joint river pipe shall be used for open cut crossings. Restrained joint pipe may be used for open cut crossings, provided it is encased in a welded steel casing. Restrained joint or fusion weld pipe shall be used for bored crossings.
2. The stream crossing pipe or casing shall extend at least 15 feet beyond the upper edge of the stream channel on each side of the stream.

B. Intermittent flowing streams

1. Restrained joint pipe shall be used for all stream crossings.
2. The pipe shall extend at least 15 feet beyond the upper edge of the stream channel on each side of the stream.

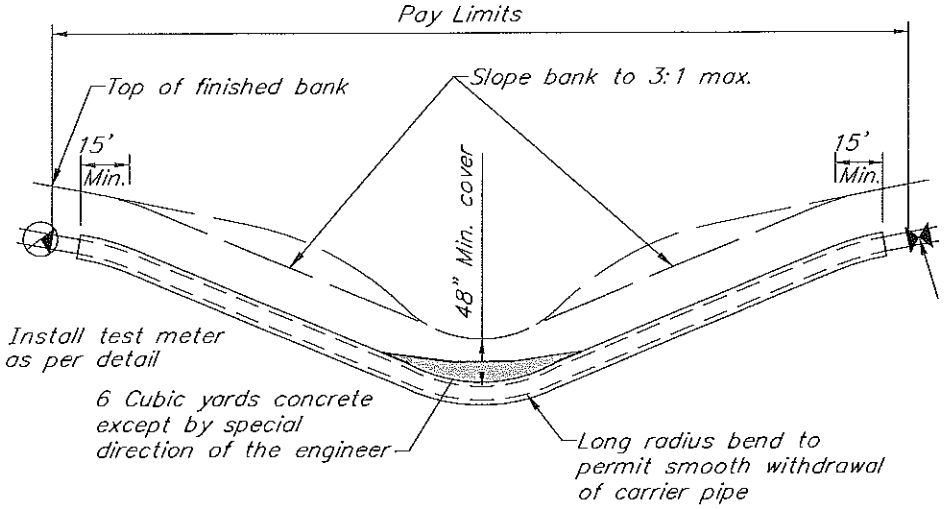

MISSOURI DESIGNATED STREAM CROSSING

Scale: Not to scale

LARKIN LAMP RYNEARSON

9200 Ward Parkway, Suite 200 816.361.0440 | P
Kansas City , Missouri 64114 816.361.0045 | F
www.LRA-Inc.com / www.larkin-grp.com

drawn by	designed by	reviewed by	project - task number	date		revisions
AJM	CAH	CAH	0313045	2014	STANDARDS	

path\filename L:\0313045 Peculiar MO Water System Study\DRAWINGS\MISC\STANDARDS.dwg

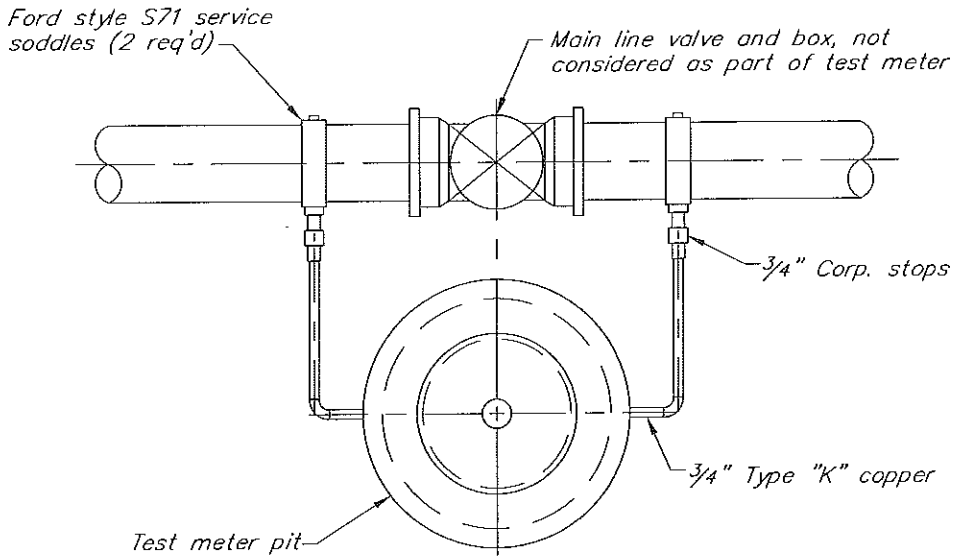

PLAN

NOTE:
Meter shall be installed after the lines have been disinfected and flushed.

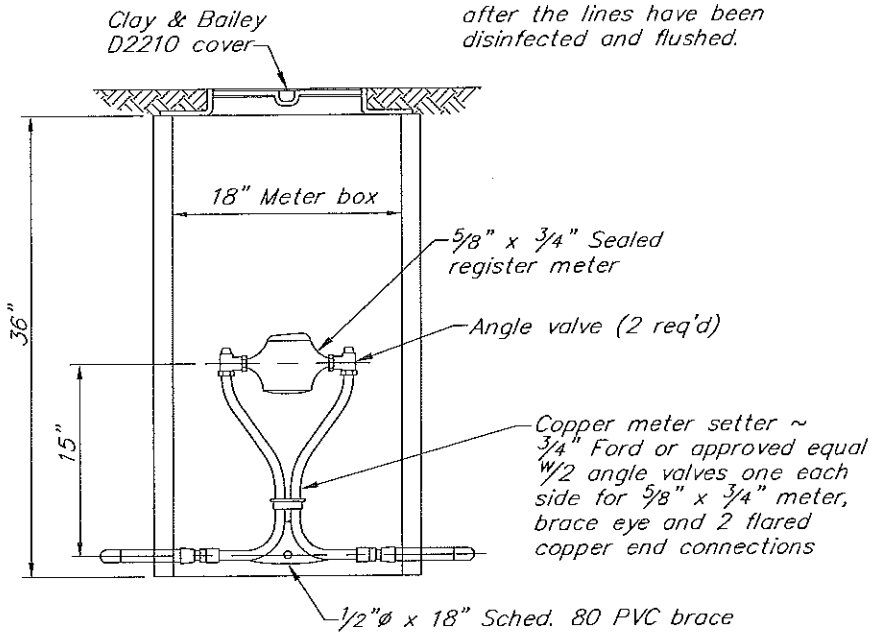

SECTION

TEST METER INSTALLATION

Scale: Not to Scale

LARKIN
LAMP RYNEARSON
9200 Ward Parkway, Suite 200 816.361.0440 | P
Kansas City , Missouri 64114 816.361.0045 | F
www.LRA-Inc.com / www.larkin-grp.com

drawn by	designed by	reviewed by	project - task number	date		revisions
AJM	CAH	CAH	0313045	2014	STANDARDS	

path\filename L:\0313045 Peculiar MO Water System Study\DRAWINGS\MISC\STANDARDS.dwg

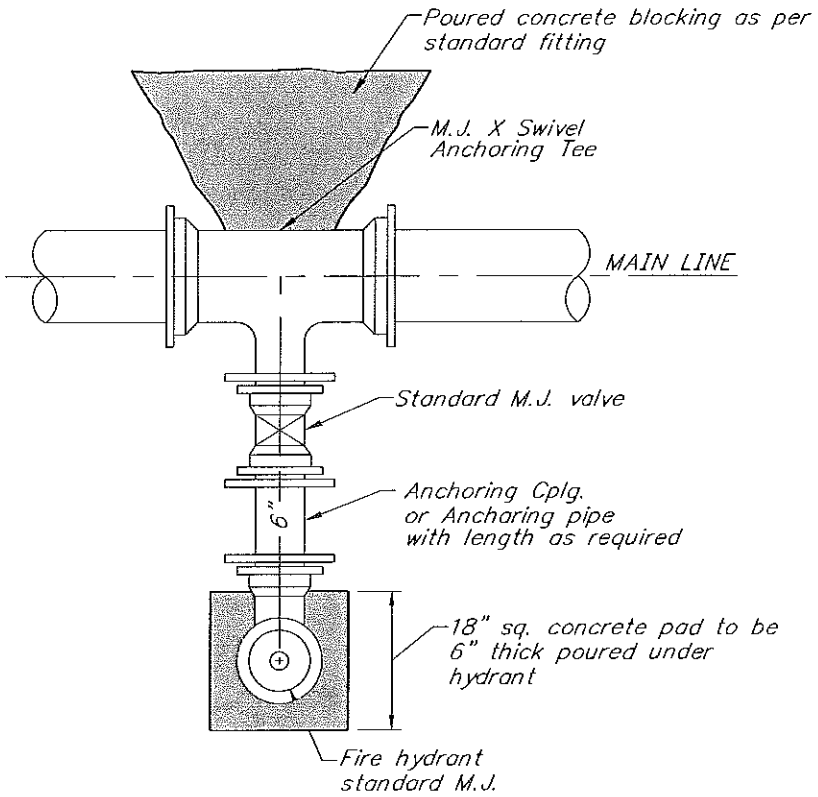

STANDARD FIRE HYDRANT DETAIL

Scale: Not to scale

LARKIN
LAMP RYNEARSON
9200 Ward Parkway, Suite 200 816.361.0440 | P
Kansas City , Missouri 64114 816.361.0045 | F
www.LRA-Inc.com / www.larkin-grp.com

drawn by	designed by	reviewed by	project - task number	date		revisions
AJM	CAH	CAH	0313045	2014	STANDARDS	

path\filename L:\0313045 Peculiar MO Water System Study\DRAWINGS\MISC\STANDARDS.dwg

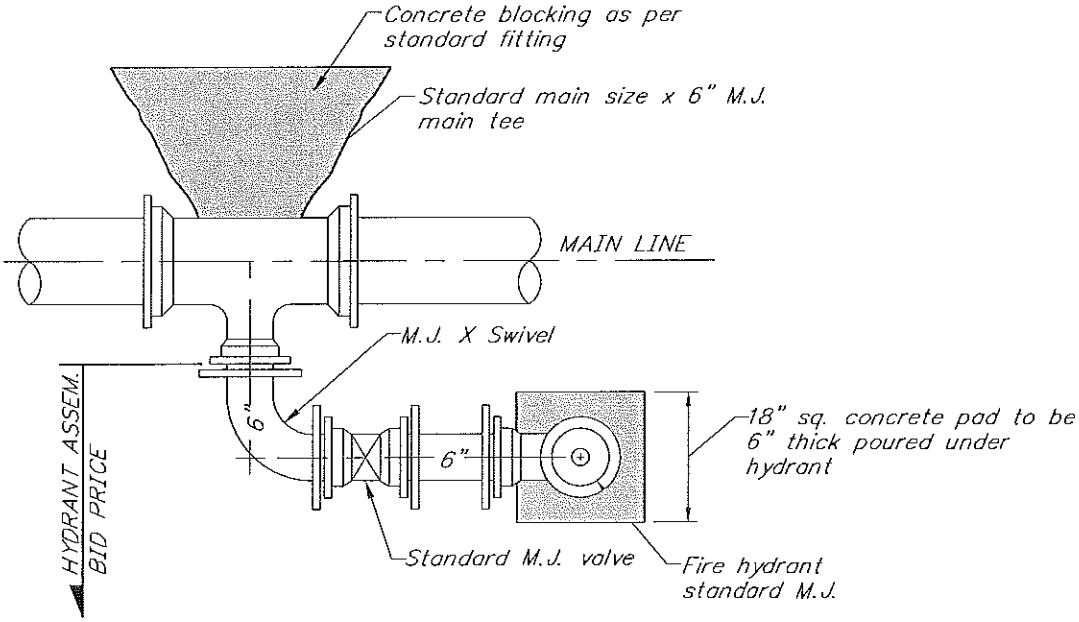

STANDARD HYDRANT INSTALLATION WITH 90° BEND

Scale: Not to scale

LARKIN LAMP RYNEARSON
9200 Ward Parkway, Suite 200 816.361.0440 | P
Kansas City , Missouri 64114 816.361.0045 | F
www.LRA-Inc.com / www.larkin-grp.com

drawn by	designed by	reviewed by	project - task number	date		revisions
AJM	CAH	CAH	0313045	2014	STANDARDS	

path\filename L:\0313045 Peculiar MO Water System Study\DRAWINGS\MISC\STANDARDS.dwg

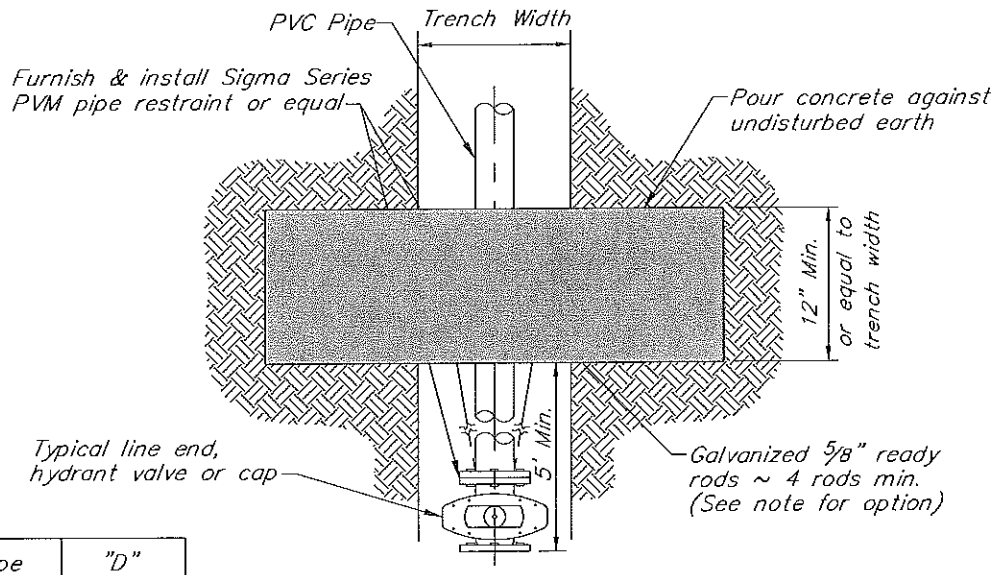

PLAN

Pipe Size	"D" Min.
4–6"	4"
8"	7"
10"	11"
12"	15"
16"	24"

NOTE:
In lieu of ready rods as shown, contractor can use Sigma PV– LOK or equol with PVC – to MJ fitting to tie valve to main.

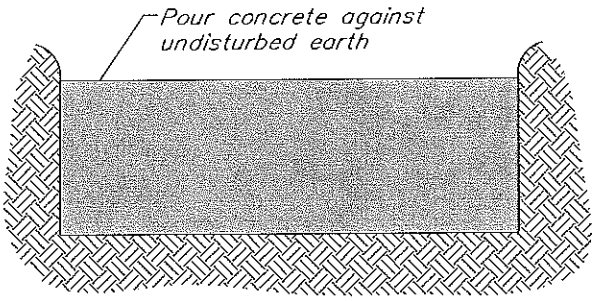

ELEVATION

STRADDLE BLOCK

Scale: Not to scale

LARKIN LAMP RYNEARSON
9200 Ward Parkway, Suite 200 816.361.0440 | P
Kansas City , Missouri 64114 816.361.0045 | F
www.LRA-Inc.com / www.larkin-grp.com

drawn by	designed by	reviewed by	project - task number	date		revisions
AJM	CAH	CAH	0313045	2014	STANDARDS	

path\filename L:\0313045 Peculiar MO Water System Study\DRAWINGS\MISC\STANDARDS.dwg

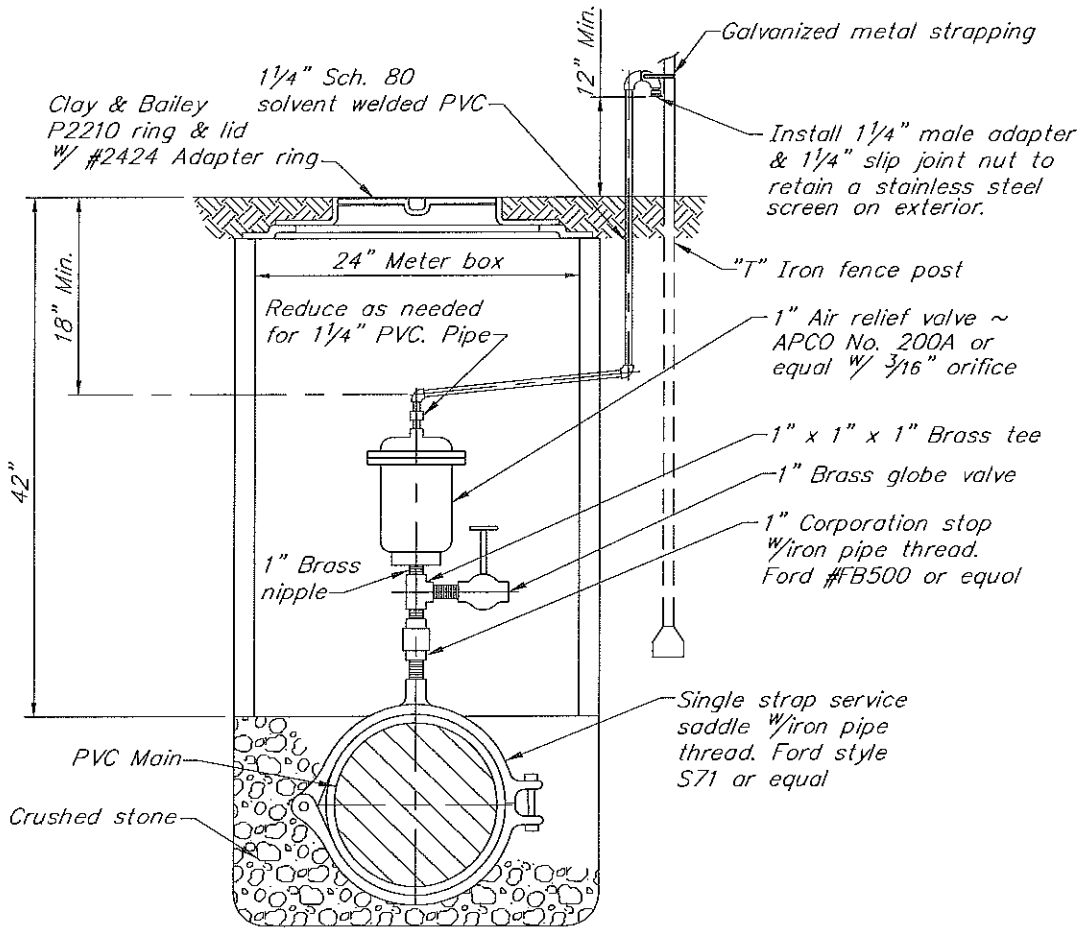

AIR RELEASE VALVE DETAIL

Scale: Not to scale

LARKIN LAMP RYNEARSON

9200 Ward Parkway, Suite 200 816.361.0440 | P
Kansas City , Missouri 64114 816.361.0045 | F
www.LRA-Inc.com / www.larkin-grp.com

drawn by	designed by	reviewed by	project - task number	date		revisions
AJM	CAH	CAH	0313045	2014	STANDARDS	

path\filename L:\0313045 Peculiar MO Water System Study\DRAWINGS\MISC\STANDARDS.dwg

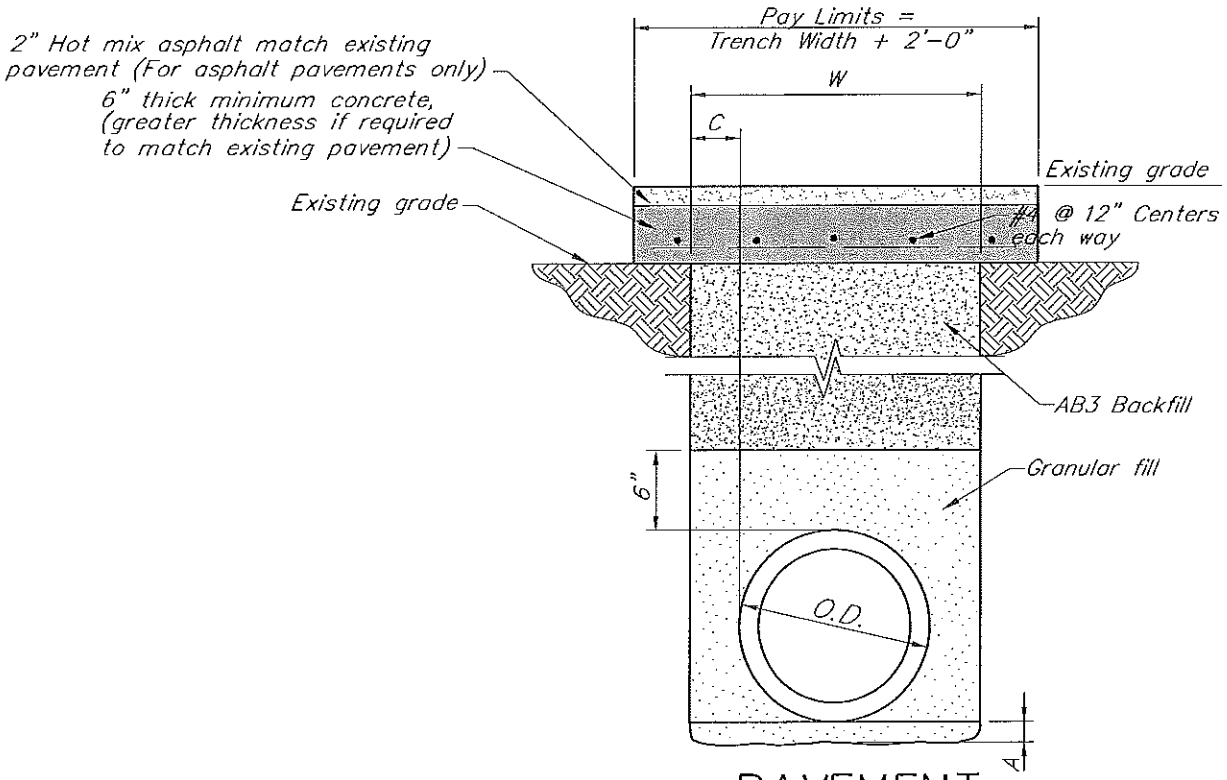

PAVEMENT RESTORATION DETAIL

Scale: Not to scale

LARKIN
LAMP RYNEARSON
9200 Ward Parkway, Suite 200 816.361.0440 | P
Kansas City , Missouri 64114 816.361.0045 | F
www.LRA-Inc.com / www.larkin-grp.com

drawn by	designed by	reviewed by	project - task number	date		revisions
AJM	CAH	CAH	0313045	2014	STANDARDS	

path\filename L:\0313045 Peculiar MO Water System Study\DRAWINGS\MISC\STANDARDS.dwg

CASING SCHEDULE FOR CROSSINGS

CROSSING TYPE	PVC OR DIP CARRIER PIPE DIAMETER							
	2"	3"	4"	6"	8"	10"	12"	18"
	*MINIMUM CASING DIAMETER							
STATE HIGHWAY (MO. HWY. SPECS.)	6" STEEL	6" STEEL	8" STEEL	10" STEEL	12" STEEL	20" STEEL	20" STEEL	30" STEEL
STREAM	4" PVC	6" PVC	8" PVC	10" PVC	12" PVC	16" STEEL	20" STEEL	30" STEEL
COUNTY AND STREET (BITUMINOUS SURFACE)	4" PVC	6" PVC	8" PVC	10" PVC	12" PVC	16" STEEL	20" STEEL	30" STEEL
RAILROAD (RAILROAD SPECS.)	6" STEEL	8" STEEL	8" STEEL	12" STEEL	16" STEEL	20" STEEL	20" STEEL	30" STEEL

Casing up thru 14" for State Highways shall have a minimum wall thickness of 0.188

Casing 16" & 20" with 0.219" and 0.281" wall thickness respectively for state highways, streams, county roads & streets.

NOTE:
Each end of casing to be sealed with Synthetic rubber, "wrap around style" end seals with stainless steel bands.

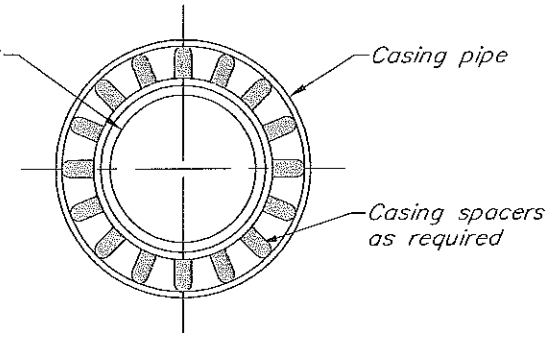

CASING DETAIL
(FOR ALL BORED CROSSINGS)

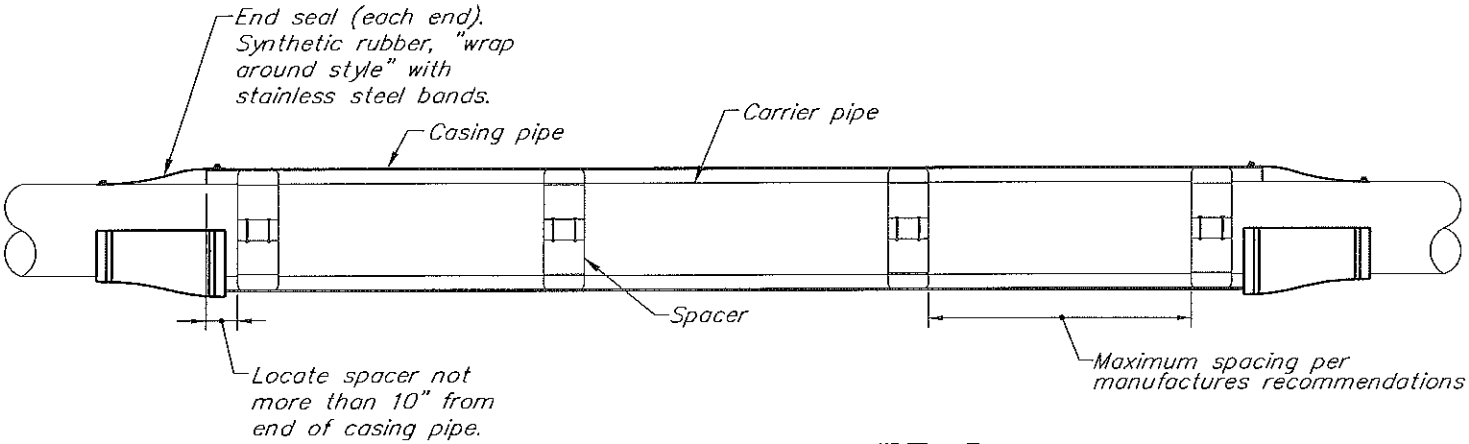

END SEAL DETAIL
Scale: Not to scale

LARKIN
LAMP RYNEARSON
9200 Ward Parkway, Suite 200 816.361.0440 | P
Kansas City , Missouri 64114 816.361.0045 | F
www.LRA-Inc.com / www.larkin-grp.com

drawn by	designed by	reviewed by	project - task number	date		revisions
AJM	CAH	CAH	0313045	2014	STANDARDS	

path\filename L:\0313045 Peculiar MO Water System Study\DRAWINGS\MISC\STANDARDS.dwg

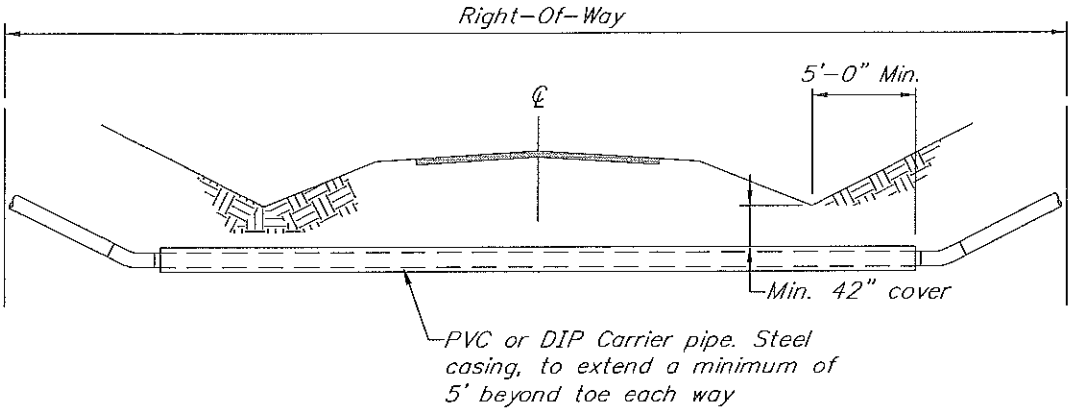

STATE HIGHWAY CROSSING

Scale: Not to scale

LARKIN
LAMP RYNEARSON
9200 Ward Parkway, Suite 200 816.361.0440 | P
Kansas City , Missouri 64114 816.361.0045 | F
www.LRA-Inc.com / www.larkin-grp.com

drawn by	designed by	reviewed by	project - task number	date		revisions
AJM	CAH	CAH	0313045	2014	STANDARDS	

path\filename L:\0313045 Peculiar MO Water System Study\DRAWINGS\MISC\STANDARDS.dwg

NOTE:

1. Bituminous surfaced roads shall be bored.

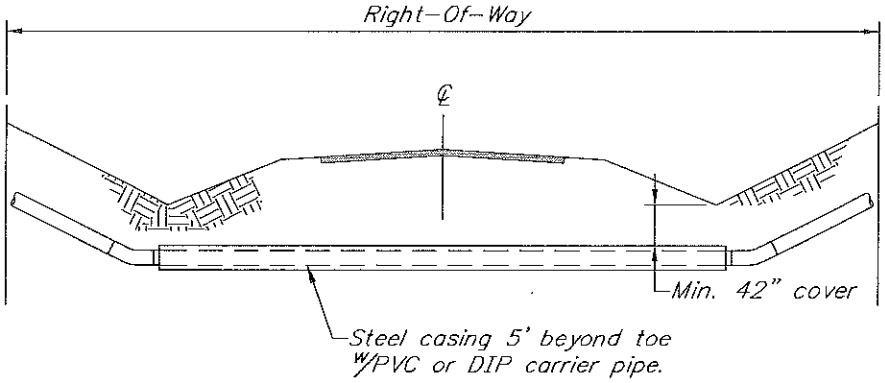

DESIGNATED CITY & COUNTY ROAD CROSSING

Scale: Not to scale

LARKIN
LAMP RYNEARSON

9200 Ward Parkway, Suite 200 816.361.0440 | P
Kansas City , Missouri 64114 816.361.0045 | F
www.LRA-Inc.com / www.larkin-grp.com

drawn by	designed by	reviewed by	project - task number	date		revisions
AJM	CAH	CAH	0313045	2014	STANDARDS	

path\filename L:\0313045 Peculiar MO Water System Study\DRAWINGS\MISC\STANDARDS.dwg

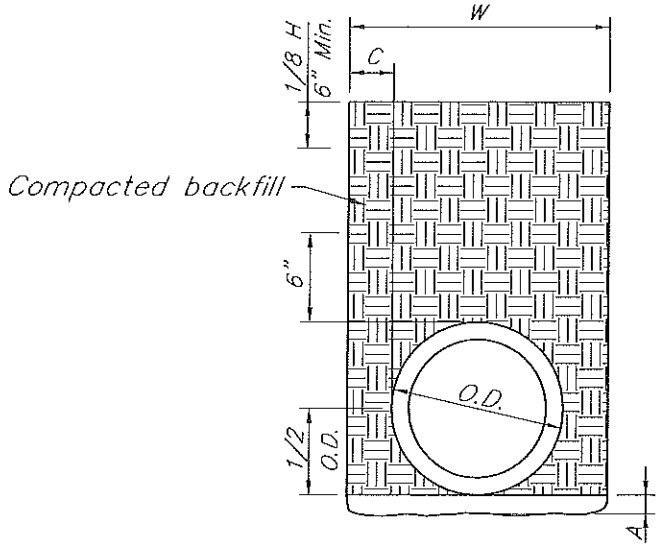

COMPACTED BACKFILL

Scale: Not to scale

NOTES:

1. A & C = Absolute min. Clearance from pipe wall to any projection of trench bottom or wall.
   A (earth excav.) 2", class b.
   A (rock excav.) 6", class b.
   C = 6"
2. W = Trench width at a level 6" above top of pipe.
   W = Min. Of 12" plus (O.D., O.S. or S).
   W = Max. Of 24" plus (O.D., O.S. or S).
3. H = Trench height, top of pipe to finished grade.
4. = granular fill.
5. = precast concrete.
6. = cast-in-place concrete.
7. = compacted trench backfill.
8. = undisturbed earth.
9. All bedding class B.
10. See specifications for trench bottom stabilization, if required.

LARKIN
LAMP RYNEARSON
9200 Ward Parkway, Suite 200 816.361.0440 | P
Kansas City , Missouri 64114 816.361.0045 | F
www.LRA-Inc.com / www.larkin-grp.com

drawn by	designed by	reviewed by	project - task number	date		revisions
AJM	CAH	CAH	0313045	2014	STANDARDS	

path\filename L:\0313045 Peculiar MO Water System Study\DRAWINGS\MISC\STANDARDS.dwg

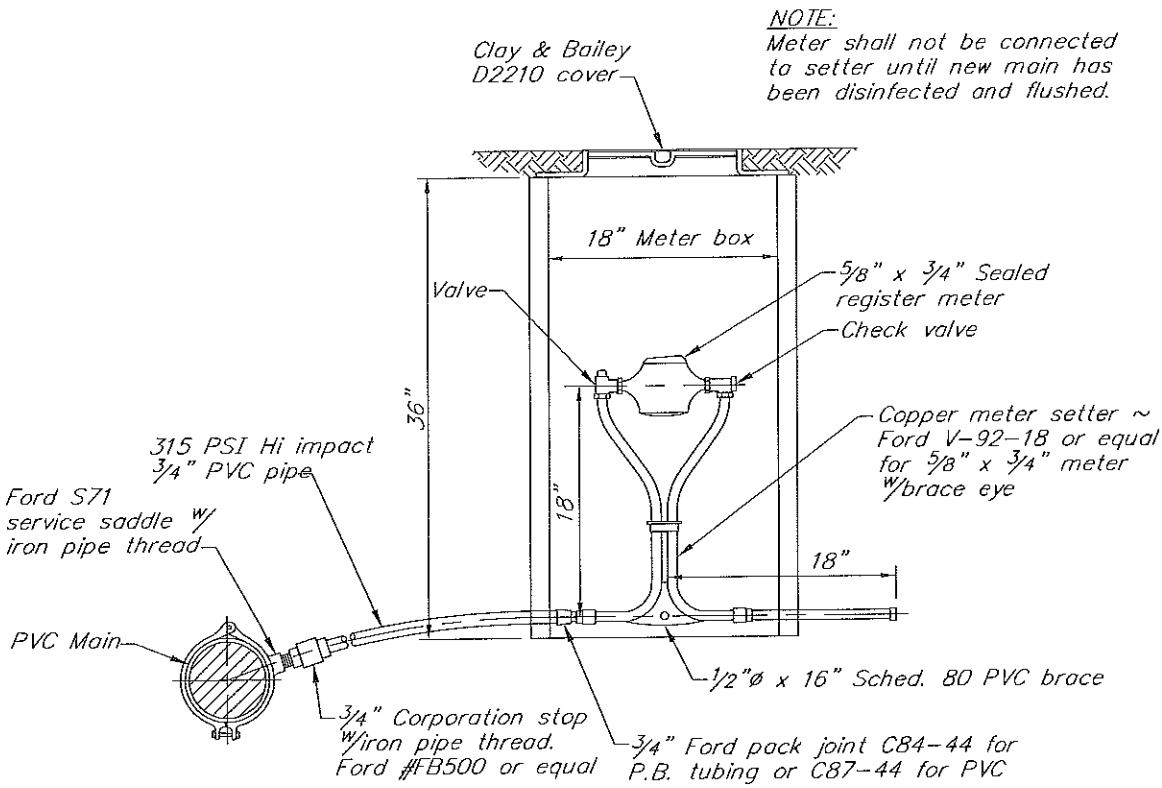

3/4" TYPICAL SERVICE CONNECTION DETAIL

LARKIN
LAMP RYNEARSON
9200 Ward Parkway, Suite 200 816.361.0440 | P
Kansas City , Missouri 64114 816.361.0045 | F
www.LRA-Inc.com / www.larkin-grp.com

drawn by	designed by	reviewed by	project - task number	date		revisions
AJM	CAH	CAH	0313045	2014	STANDARDS	

path\filename L:\0313045 Peculiar MO Water System Study\DRAWINGS\MISC\STANDARDS.dwg

BILL NO. 2014-22
ORDINANCE NO. _____

AN ORDINANCE OF THE CITY OF PECULIAR, MISSOURI AMENDING PECULIAR MUNICIPAL CODE § 500.065 "ADOPTION OF STANDARD SPECIFICATION AND DESIGN CRITERA."

WHEREAS, the Board of Aldermen desire to update the engineering requirements for design criteria.

NOW THEREFORE, be it ordained by the Board of Aldermen of the City of Peculiar, Missouri as follows:

SECTION I.

The City of Peculiar hereby adopts the Manual of Practice for Water Main Extensions (design specifications and construction details) for Peculiar, Missouri prepared by Larkin Lamp Rynearson (June 2014) and approved by the Missouri Department of Natural Resources. The above referenced document supplements the American Public Works Association (APWA) Standards, current edition, for use within Peculiar.

SECTION II: The effective date of this ordinance shall be August __, 2014.

First Reading: _____ **Second Reading: _____**

BE IT REMEMBERED THE PRECEDING ORDINANCE WAS ADOPTED ON ITS SECOND READING THIS _____ DAY OF _____, 2014, BY THE FOLLOWING VOTE:

Alderman Fines	**_____**	**Alderman Ray**	**_____**
Alderman Ford	**_____**	**Alderman Roberts**	**_____**
Alderman McCrea	**_____**	**Alderman Turner**	**_____**

Approved: **Attest:**

_____ _____

Holly J. Stark, Mayor **Nick Jacobs, City Clerk**

City Administrator
Brad Ratliff

City Clerk
Nick Jacobs

City Engineer
Carl Brooks

Business Office
Trudy Prickett

Chief of Police
Harry Gurin

City Planner
Cliff McDonald

City Attorney
Reid Holbrook

Parks Director
Nathan Musteen

Municipal Offices – 250 S. Main Street, Peculiar, MO 64078
Phone: (816)779-5212 Facsimile: (816)779-1004

To: Mayor & Board of Aldermen
From: Carl Brooks, City Engineer (cbrooks@cityofpeculiar.com)
Date: July 18, 2014
Re: Resolution No. 2014-40, Mayor & Board of Alderman (BOA) to approve Resolution No. 2014-xx, acceptance of an agreement for the engineering improvements for design, survey, advertise, award, bid and construction phase services for the transmission main along J Hwy.

GENERAL INFORMATION

Applicant: City Staff
Requested Actions: Acknowledgement of Received
Purpose: Acceptance of the request to start design of the project of the highest priority project identified in Larkin's 2014 Engineering Report, the transmission main along Route J.
Property Location: Along five (5) miles of Route J from the Raymore elevated storage tank to two (2) different locations in Peculiar in accordance with the 2014 Engineering Report.

PROPOSAL

City Staff proposes the design and construction of approximately five (5) miles of a transmission main line running parallel to Route J to connect to the KCMO water supply at Raymore's elevated storage tank.

Kansas City, Mo Water Services Department has a 24-inch diameter transmission main that extends south of the intersection of J HWY and Hubach Hill Road to the Raymore elevated storage tank.

The water distribution system can be connected to the Raymore storage tank from two locations:

1. At a point on Highway J, just east of I-49 to an existing water main at Branic Road.
2. The second connection point would connect to a proposed main that will be located in preparation for the new 211th street interchange.

The design, survey, advertise, award, bid and construction phase services for the transmission main hydraulic improvements as listed in the 2014 Engineering Report is not to exceed 378,344.50.

PREVIOUS ACTIONS

The Mayor and BOA issued more than $1.0M in water revenue bonds in the fall of 2013.

The City has compiled a list of eleven (11) project improvements identified in the Engineering Report prepared by Larkin and approved by MDNR. These improvements have been identified and further explained in the report. However, the above project listed is of the upmost importance and believed to be of the highest urgency as identified in the report.

KEY ISSUES

The installation of the 12-inch water main along J Hwy to Peculiar as an alternative water supply from its current supplier is one of the upmost importance for the future of Peculiar's growth. As indicated on the attached graph "*Impact of Cass (PWSD No. 2, current water supplier) versus KC Water Supply 5,000 Gallon Customer*"; the savings to our customers over time will be substantial as the cost of water will decrease compared to the direct purchase from Cass versus KCMO

The 12-inch transmission main has an estimated cost of $3.9M; and is identified as the highest priority project to start design in the 2014 Engineering Report.

City attorney has reviewed the engineering agreement. His comments were minor, and comments have been resolved with the engineer.

STAFF COMMENTS AND SUGGESTIONS

City staff agrees with the recommendations included in the Engineering Report, and recommends approval of the engineering agreement in an amount not to exceed $378,344.50.00.

As you may recall, initially the amount of the engineering agreement was not to exceed $490,831.00. Due to continued negotiations between the engineer and City staff and Construction Phase Service duties initially assigned to be completed by the engineer that are now being completed by City Staff; the agreement has been reduced by $112,486.50, or a savings to our water customers of more than 20 percent.

STAFF RECOMMENDATION

As the City's updated water hydraulic model indicates, which is part of an engineering grant that the city received, indicates that the City's future growth and development needs are better served by the installation of this project. Therefore, City staff will recommend the design of said improvements.

City staff recommends the approval of the design, survey, advertise, award, bid and construction phase services for the transmission main improvements as listed in the 2014 Engineering Report.

ATTACHMENTS

- Larkin Agreement – Kansas City Water Supply Transmission Main, Master Meter and Appurtenances
- Graph
- Engineer's Opinion of Probable Cost
- Resolution 2014-xx

Engineers Joint Documents Committee
Design and Construction Related Documents
Instructions and License Agreement

Instructions

Before you use any EJCDC document:

1. Read the License Agreement. You agree to it and are bound by its terms when you use the EJCDC document.

2. Make sure that you have the correct version for your word processing software.

How to Use:

1. While EJCDC has expended considerable effort to make the software translations exact, it can be that a few document controls (e.g., bold, underline) did not carry over.

2. Similarly, your software may change the font specification if the font is not available in your system. It will choose a font that is close in appearance. In this event, the pagination may not match the control set.

3. If you modify the document, you must follow the instructions in the License Agreement about notification.

4. Also note the instruction in the License Agreement about the EJCDC copyright.

License Agreement

You should carefully read the following terms and conditions before using this document. Commencement of use of this document indicates your acceptance of these terms and conditions. If you do not agree to them, you should promptly return the materials to the vendor, and your money will be refunded.

The Engineers Joint Contract Documents Committee ("EJCDC") provides **EJCDC Design and Construction Related Documents** and licenses their use worldwide. You assume sole responsibility for the selection of specific documents or portions thereof to achieve your intended results, and for the installation, use, and results obtained from **EJCDC Design and Construction Related Documents**.

You acknowledge that you understand that the text of the contract documents of **EJCDC Design and Construction Related Documents** has important legal consequences and that consultation with an attorney is recommended with respect to use or modification of the text. You further acknowledge that EJCDC documents are protected by the copyright laws of the United States.

License:

You have a limited nonexclusive license to:

1. Use **EJCDC Design and Construction Related Documents** on any number of machines owned, leased or rented by your company or organization.

2. Use **EJCDC Design and Construction Related Documents** in printed form for bona fide contract documents.

3. Copy **EJCDC Design and Construction Related Documents** into any machine readable or printed form for backup or modification purposes in support of your use of **EJCDC Design and Construction Related Documents**.

You agree that you will:

1. Reproduce and include EJCDC's copyright notice on any printed or machine-readable copy, modification, or portion merged into another document or program. All proprietary rights in **EJCDC Design and Construction Related Documents** are and shall remain the property of EJCDC.

2. Not represent that any of the contract documents you generate from **EJCDC Design and Construction Related Documents** are EJCDC documents unless (i) the document text is used without alteration or (ii) all additions and changes to, and deletions from, the text are clearly shown.

You may not use, copy, modify, or transfer EJCDC Design and Construction Related Documents, or any copy, modification or merged portion, in whole or in part, except as expressly provided for in this license. Reproduction of EJCDC Design and Construction Related Documents in printed or machine-readable format for resale or educational purposes is expressly prohibited.

If you transfer possession of any copy, modification or merged portion of EJCDC Design and Construction Related Documents to another party, your license is automatically terminated.

Term:

The license is effective until terminated. You may terminate it at any time by destroying **EJCDC Design and Construction Related Documents** altogether with all copies, modifications and merged portions in any form. It will also terminate upon conditions set forth elsewhere in

this Agreement or if you fail to comply with any term or condition of this Agreement. You agree upon such termination to destroy **EJCDC Design and Construction Related Documents** along with all copies, modifications and merged portions in any form.

Limited Warranty:
EJCDC warrants the CDs and diskettes on which **EJCDC Design and Construction Related Documents** is furnished to be free from defects in materials and workmanship under normal use for a period of ninety (90) days from the date of delivery to you as evidenced by a copy of your receipt.

There is no other warranty of any kind, either expressed or implied, including, but not limited to the implied warranties of merchantability and fitness for a particular purpose. Some states do not allow the exclusion of implied warranties, so the above exclusion may not apply to you. This warranty gives you specific legal rights and you may also have other rights which vary from state to state.

EJCDC does not warrant that the functions contained in **EJCDC Design and Construction Related Documents** will meet your requirements or that the operation of **EJCDC Design and Construction Related Documents** will be uninterrupted or error free.

Limitations of Remedies:
EJCDC's entire liability and your exclusive remedy shall be:

1. the replacement of any document not meeting EJCDC's "Limited Warranty" which is returned to EJCDC's selling agent with a copy of your receipt, or

2. if EJCDC's selling agent is unable to deliver a replacement CD or diskette which is free of defects in materials and workmanship, you may terminate this Agreement by returning EJCDC Document and your money will be refunded.

In no event will EJCDC be liable to you for any damages, including any lost profits, lost savings or other incidental or consequential damages arising out of the use or inability to use **EJCDC Design and Construction Related Documents** even if EJCDC has been advised of the possibility of such damages, or for any claim by any other party.

Some states do not allow the limitation or exclusion of liability for incidental or consequential damages, so the above limitation or exclusion may not apply to you.

General:
You may not sublicense, assign, or transfer this license except as expressly provided in this Agreement. Any attempt otherwise to sublicense, assign, or transfer any of the rights, duties, or obligations hereunder is void.

This Agreement shall be governed by the laws of the State of Virginia. Should you have any questions concerning this Agreement, you may contact EJCDC by writing to:

Arthur Schwartz, Esq.
General Counsel
National Society of Professional Engineers
1420 King Street
Alexandria, VA 22314

Phone: (703) 684-2845
Fax: (703) 836-4875
e-mail: aschwartz@nspe.org

You acknowledge that you have read this agreement, understand it and agree to be bound by its terms and conditions. You further agree that it is the complete and exclusive statement of the agreement between us which supersedes any proposal or prior agreement, oral or written, and any other communications between us relating to the subject matter of this agreement.

This document has important legal consequences; consultation with an attorney is encouraged with respect to its use or modification. This document should be adapted to the particular circumstances of the contemplated Project and the Controlling Laws and Regulations.

AGREEMENT BETWEEN OWNER AND ENGINEER FOR PROFESSIONAL SERVICES

Prepared by

ENGINEERS JOINT CONTRACT DOCUMENTS COMMITTEE

and

Issued and Published Jointly by

AMERICAN COUNCIL OF ENGINEERING COMPANIES

ASSOCIATED GENERAL CONTRACTORS OF AMERICA

AMERICAN SOCIETY OF CIVIL ENGINEERS

PROFESSIONAL ENGINEERS IN PRIVATE PRACTICE
A Practice Division of the
NATIONAL SOCIETY OF PROFESSIONAL ENGINEERS

Copyright © 2008 National Society of Professional Engineers for EJCDC. All rights reserved.

This Agreement has been prepared for use with the Standard General Conditions of the Construction Contract (EJCDC C-700, 2007 Edition). Their provisions are interrelated, and a change in one may necessitate a change in the other. For guidance on the completion and use of this Agreement, see EJCDC User's Guide to the Owner-Engineer Agreement, EJCDC E-001, 2009 Edition.

Copyright © 2008 National Society of Professional Engineers
1420 King Street, Alexandria, VA 22314-2794
(703) 684-2882
www.nspe.org

American Council of Engineering Companies
1015 15th Street N.W., Washington, DC 20005
(202) 347-7474
www.acec.org

American Society of Civil Engineers
1801 Alexander Bell Drive, Reston, VA 20191-4400
(800) 548-2723
www.asce.org

Associated General Contractors of America
2300 Wilson Boulevard, Suite 400, Arlington, VA 22201-3308
(703) 548-3118
www.agc.org

The copyright for this EJCDC document is owned jointly by the four EJCDC sponsoring organizations and held in trust for their benefit by NSPE.

TABLE OF CONTENTS

Page

ARTICLE 1 – SERVICES OF ENGINEER 1
1.01 Scope 1

ARTICLE 2 – OWNER'S RESPONSIBILITIES 1
2.01 General 1

ARTICLE 3 – SCHEDULE FOR RENDERING SERVICES 2
3.01 Commencement 2
3.02 Time for Completion 2

ARTICLE 4 – INVOICES AND PAYMENTS 2
4.01 Invoices 2
4.02 Payments 2

ARTICLE 5 – OPINIONS OF COST 3
5.01 Opinions of Probable Construction Cost 3
5.02 Designing to Construction Cost Limit 3
5.03 Opinions of Total Project Costs 3

ARTICLE 6 – GENERAL CONSIDERATIONS 3
6.01 Standards of Performance 3
6.02 Design Without Construction Phase Services 5
6.03 Use of Documents 5
6.04 Insurance 6
6.05 Suspension and Termination 6
6.06 Controlling Law 8
6.07 Successors, Assigns, and Beneficiaries 8
6.08 Dispute Resolution 8
6.09 Environmental Condition of Site 8
6.10 Indemnification and Mutual Waiver 9
6.11 Miscellaneous Provisions 10

ARTICLE 7 – DEFINITIONS 10
7.01 Defined Terms 10

ARTICLE 8 – EXHIBITS AND SPECIAL PROVISIONS 13
8.01 Exhibits Included 13
8.02 Total Agreement 14
8.03 Designated Representatives 14
8.04 Engineer's Certifications 14

Copyright © 2008 National Society of Professional Engineers for EJCDC. All rights reserved.

AGREEMENT
BETWEEN OWNER AND ENGINEER
FOR
PROFESSIONAL SERVICES

THIS IS AN AGREEMENT effective as of _____ , **2014** ("Effective Date") between

City of Peculiar, Missouri ("Owner") and

Lamp, Rynearson and Associates, Inc., dba Larkin Lamp Rynearson ("Engineer").

Owner's Project, of which Engineer's services under this Agreement are a part, is generally identified as follows:

Kansas City Water Supply Transmission Main and Master Meter and Appurtenances ("Project").

Engineer's services under this Agreement are generally identified as follows:

Engineering design, engineering survey, construction administration and milestone inspections.

Owner and Engineer further agree as follows:

ARTICLE 1 – SERVICES OF ENGINEER

1.01 *Scope*

A. Engineer shall provide, or cause to be provided, the services set forth herein and in Exhibit A.

ARTICLE 2 – OWNER'S RESPONSIBILITIES

2.01 *General*

A. Owner shall have the responsibilities set forth herein and in Exhibit B.

B. Owner shall pay Engineer as set forth in Exhibit C.

C. Owner shall be responsible for, and Engineer may rely upon, the accuracy and completeness of all requirements, programs, instructions, reports, data, and other information furnished by Owner to Engineer pursuant to this Agreement. Engineer may use such requirements, programs, instructions, reports, data, and information in performing or furnishing services under this Agreement.

Copyright © 2008 National Society of Professional Engineers for EJCDC. All rights reserved.

ARTICLE 3 – SCHEDULE FOR RENDERING SERVICES

3.01 *Commencement*

A. Engineer is authorized to begin rendering services as of the Effective Date.

3.02 *Time for Completion*

A. Engineer shall complete its obligations within a reasonable time. Specific periods of time for rendering services are set forth or specific dates by which services are to be completed are provided in Exhibit A, and are hereby agreed to be reasonable.

B. If, through no fault of Engineer, such periods of time or dates are changed, or the orderly and continuous progress of Engineer's services is impaired, or Engineer's services are delayed or suspended, then the time for completion of Engineer's services, and the rates and amounts of Engineer's compensation, shall be adjusted equitably.

C. If Owner authorizes changes in the scope, extent, or character of the Project, then the time for completion of Engineer's services, and the rates and amounts of Engineer's compensation, shall be adjusted equitably.

D. Owner shall make decisions and carry out its other responsibilities in a timely manner so as not to delay the Engineer's performance of its services.

E. If Engineer fails, through its own fault, to complete the performance required in this Agreement within the time set forth, as duly adjusted, then Owner shall be entitled, as its sole remedy, to the recovery of direct damages, if any, resulting from such failure.

ARTICLE 4 – INVOICES AND PAYMENTS

4.01 *Invoices*

A. *Preparation and Submittal of Invoices*: Engineer shall prepare invoices in accordance with its standard invoicing practices and the terms of Exhibit C. Engineer shall submit its invoices to Owner on a monthly basis. Invoices are due and payable **within 30 days of** receipt.

4.02 *Payments*

A. Application *to Interest and Principal*: Payment will be credited first to any interest owed to Engineer and then to principal.

B. *Failure to Pay*: If Owner fails to make any payment due Engineer for services and expenses within **30** days after receipt of Engineer's invoice, then:

1. amounts due Engineer will be increased at the rate of 1.0% per month (or the maximum rate of interest permitted by law, if less) **computed** from thirtieth day **after the date of Engineer's invoice**; and

2. Engineer may, after giving seven days written notice to Owner, suspend services under this Agreement until Owner has paid in full all amounts due for services, expenses, and other related charges. Owner waives any and all claims against Engineer for any such suspension.

C. *Disputed Invoices:* If Owner contests an invoice, Owner shall promptly advise Engineer of the specific basis for doing so, may withhold only that portion so contested, and must pay the undisputed portion.

Copyright © 2008 National Society of Professional Engineers for EJCDC. All rights reserved.

D. *Legislative Actions:* If after the Effective Date any governmental entity takes a legislative action that imposes taxes, fees, or charges on Engineer's services or compensation under this Agreement, then the Engineer may invoice such new taxes, fees, or charges as a Reimbursable Expense to which a factor of 1.0 shall be applied. Owner shall reimburse Engineer for the cost of such invoiced new taxes, fees, and charges; such reimbursement shall be in addition to the compensation to which Engineer is entitled under the terms of Exhibit C.

ARTICLE 5 – OPINIONS OF COST

5.01 *Opinions of Probable Construction Cost*

A. Engineer's opinions of probable Construction Cost are to be made on the basis of Engineer's experience and qualifications and represent Engineer's best judgment as an experienced and qualified professional generally familiar with the construction industry. However, because Engineer has no control over the cost of labor, materials, equipment, or services furnished by others, or over contractors' methods of determining prices, or over competitive bidding or market conditions, Engineer cannot and does not guarantee that proposals, bids, or actual Construction Cost will not vary from opinions of probable Construction Cost prepared by Engineer. If Owner requires greater assurance as to probable Construction Cost, Owner must employ an independent cost estimator as provided in Exhibit B.

5.02 *Designing to Construction Cost Limit*

A. If a Construction Cost limit is established between Owner and Engineer, such Construction Cost limit and a statement of Engineer's rights and responsibilities with respect thereto will be specifically set forth in Exhibit F, "Construction Cost Limit," to this Agreement.

5.03 *Opinions of Total Project Costs*

A. The services, if any, of Engineer with respect to Total Project Costs shall be limited to assisting the Owner in collating the various cost categories which comprise Total Project Costs. Engineer assumes no responsibility for the accuracy of any opinions of Total Project Costs.

ARTICLE 6 – GENERAL CONSIDERATIONS

6.01 *Standards of Performance*

A. *Standard of Care:* The standard of care for all professional engineering and related services performed or furnished by Engineer under this Agreement will be the care and skill ordinarily used by members of the subject profession practicing under similar circumstances at the same time and in the same locality. ~~Engineer makes no warranties, express or implied, under this Agreement or otherwise, in connection with Engineer's services.~~

B. *Technical Accuracy:* Owner shall not be responsible for discovering deficiencies in the technical accuracy of Engineer's services. Engineer shall correct deficiencies in technical accuracy without additional compensation, unless such corrective action is directly attributable to deficiencies in Owner-furnished information.

C. *Consultants:* Engineer may employ such Consultants as Engineer deems necessary to assist in the performance or furnishing of the services, subject to reasonable, timely, and substantive objections by Owner.

D. *Reliance on Others:* Subject to the standard of care set forth in Paragraph 6.01.A, Engineer and its Consultants may use or rely upon design elements and information ordinarily or customarily furnished by

Copyright © 2008 National Society of Professional Engineers for EJCDC. All rights reserved.

others, including, but not limited to, specialty contractors, manufacturers, suppliers, and the publishers of technical standards.

E. Compliance with Laws and Regulations, and Policies and Procedures:

1. Engineer and Owner shall comply with applicable Laws and regulations.

2. Prior to the Effective Date, Owner provided to Engineer in writing any and all policies and procedures of Owner applicable to Engineer's performance of services under this Agreement provided to Engineer in writing. Engineer shall comply with such policies and procedures, subject to the standard of care set forth in Paragraph 6.01.A, and to the extent compliance is not inconsistent with professional practice requirements.

3. This Agreement is based on Laws and Regulations and Owner-provided written policies and procedures as of the Effective Date. Changes after the Effective Date to these Laws and Regulations, or to Owner-provided written policies and procedures, may be the basis for modifications to Owner's responsibilities or to Engineer's scope of services, times of performance, or compensation.

F. Engineer shall not be required to sign any documents, no matter by whom requested, that would result in the Engineer having to certify, guarantee, or warrant the existence of conditions whose existence the Engineer cannot ascertain. Owner agrees not to make resolution of any dispute with the Engineer or payment of any amount due to the Engineer in any way contingent upon the Engineer signing any such documents.

G. The general conditions for any construction contract documents prepared hereunder are to be the "Standard General Conditions of the Construction Contract" as prepared by the Engineers Joint Contract Documents Committee (EJCDC C-700, 2007 Edition)**, with revisions by the Engineer,** unless both parties mutually agree to use other general conditions by specific reference in Exhibit J. **Copies of the Engineer revised document are available for review.**

H. Engineer shall not at any time supervise, direct, control, or have authority over any contractor work, nor shall Engineer have authority over or be responsible for the means, methods, techniques, sequences, or procedures of construction selected or used by any contractor, or the safety precautions and programs incident thereto, for security or safety at the Site, nor for any failure of a contractor to comply with Laws and Regulations applicable to such contractor's furnishing and performing of its work.

I. Engineer neither guarantees the performance of any Contractor nor assumes responsibility for any Contractor's failure to furnish and perform the Work in accordance with the Contract Documents.

J. Engineer shall not provide or have any responsibility for surety bonding or insurance-related advice, recommendations, counseling, or research, or enforcement of construction insurance or surety bonding requirements.

K. Engineer shall not be responsible for the acts or omissions of any Contractor, Subcontractor, or Supplier, or of any of their agents or employees or of any other persons (except Engineer's own agents, employees, and Consultants) at the Site or otherwise furnishing or performing any Work; or for any decision made regarding the Contract Documents, or any application, interpretation, or clarification, of the Contract Documents, other than those made by Engineer.

L. While at the Site, Engineer's employees and representatives shall comply with the specific applicable requirements of Contractor's and Owner's safety programs of which Engineer has been informed in writing.

Copyright © 2008 National Society of Professional Engineers for EJCDC. All rights reserved.

6.02 *Design Without Construction Phase Services*

A. Engineer shall be responsible only for those Construction Phase services expressly required of Engineer in Exhibit A~~, Paragraph A1.05~~. With the exception of such expressly required services, Engineer shall have no design, Shop Drawing review, or other obligations during construction and Owner assumes all responsibility for the application and interpretation of the Contract Documents, review and response to Contractor claims, contract administration, processing Change Orders, revisions to the Contract Documents during construction, construction surety bonding and insurance requirements, construction observation and review, review of payment applications, and all other necessary Construction Phase engineering and professional services. Owner waives all claims against the Engineer that may be connected in any way to Construction Phase engineering or professional services except for those services that are expressly required of Engineer in Exhibit A~~, Paragraph A1.05~~.

6.03 *Use of Documents*

A. All Documents are **Engineer's** instruments of service in respect to this Project~~, and Engineer shall retain an ownership and property interest therein (including the copyright and the right of reuse at the discretion of the Engineer) whether or not the Project is completed~~. Owner shall not rely in any way on any Document unless it is in printed form, signed or sealed by the Engineer or one of its Consultants.

B. Either party to this Agreement may rely that data or information set forth on paper (also known as hard copies) that the party receives from the other party by mail, hand delivery, or facsimile, are the items that the other party intended to send. Files in electronic media format of text, data, graphics, or other types that are furnished by one party to the other are furnished only for convenience, not reliance by the receiving party. Any conclusion or information obtained or derived from such electronic files will be at the user's sole risk. If there is a discrepancy between the electronic files and the hard copies, the hard copies govern. If the parties agree to other electronic transmittal procedures, such are set forth in Exhibit J.

C. Because data stored in electronic media format can deteriorate or be modified inadvertently or otherwise without authorization of the data's creator, the party receiving electronic files agrees that it will perform acceptance tests or procedures within 60 days, after which the receiving party shall be deemed to have accepted the data thus transferred. Any transmittal errors detected within the 60-day acceptance period will be corrected by the party delivering the electronic files.

D. When transferring documents in electronic media format, the transferring party makes no representations as to long-term compatibility, usability, or readability of such documents resulting from the use of software application packages, operating systems, or computer hardware differing from those used by the documents' creator.

E. Owner~~ may make and retain copies of Documents for information and reference in connection with use on the Project by Owner. Engineer grants Owner a limited license to use the Documents on the Project, extensions of the Project, and for related uses of the Owner,~~ **shall receive ownership of the final construction documents prepared under this Agreement,** subject to receipt by Engineer of full payment for all services relating to preparation of the Documents and subject to the following limitations: (1) Owner acknowledges that such Documents are not intended or represented to be suitable for use on the Project unless completed by Engineer, or for use or reuse by Owner or others on extensions of the Project, on any other project, or for any other use or purpose, without written verification or adaptation by Engineer; (2) any such use or reuse, or any modification of the Documents, without written verification, completion, or adaptation by Engineer, as appropriate for the specific purpose intended, will be at Owner's sole risk and without liability or legal exposure to Engineer or to its officers, directors, members, partners, agents, employees, and Consultants; (3) Owner shall indemnify and hold harmless Engineer and its officers, directors, members, partners, agents, employees, and Consultants from all claims, damages, losses, and expenses, including attorneys' fees, arising out of or resulting from any use, reuse, or

Copyright © 2008 National Society of Professional Engineers for EJCDC. All rights reserved.

modification of the Documents without written verification, completion, or adaptation by Engineer; and (4) such limited license to Owner shall not create any rights in third parties.

F. If Engineer at Owner's request verifies the suitability of the Documents, completes them, or adapts them for extensions of the Project or for any other purpose, then Owner shall compensate Engineer at rates or in an amount to be agreed upon by Owner and Engineer.

6.04 *Insurance*

A. Engineer shall procure and maintain insurance as set forth in Exhibit G, "Insurance." Engineer shall cause Owner to be listed as an additional insured on any applicable general liability insurance policy carried by Engineer.

B. Owner shall procure and maintain insurance as set forth in Exhibit G, "Insurance." Owner shall cause Engineer and its Consultants to be listed as additional insureds on any general liability policies and as loss payees on any property insurance policies carried by Owner which are applicable to the Project.

C. Owner shall require Contractor to purchase and maintain policies of insurance covering workers' compensation, general liability, property damage (other than to the Work itself), motor vehicle damage and injuries, and other insurance necessary to protect Owner's and Engineer's interests in the Project**, as per the requirements of paragraphs 5.04, 5.05 and 5.06 of the "Standard General Conditions of the Construction Contract" as prepared by the Engineers Joint Contract Documents Committee (EJCDC C-700, 2007 Edition, and the Supplementary Conditions prepared by the Engineer**. Owner shall require Contractor to cause Engineer and its Consultants to be listed as additional insureds with respect to such liability and other insurance purchased and maintained by Contractor for the Project.

D. Owner and Engineer shall each deliver to the other certificates of insurance evidencing the coverages indicated in Exhibit G. Such certificates shall be furnished prior to commencement of Engineer's services and at renewals thereafter during the life of the Agreement.

E. All policies of property insurance relating to the Project shall contain provisions to the effect that Engineer's and its Consultants' interests are covered and that in the event of payment of any loss or damage the insurers will have no rights of recovery against Engineer or its Consultants, or any insureds, additional insureds, or loss payees thereunder.

F. All policies of insurance shall contain a provision or endorsement that the coverage afforded will not be canceled or reduced in limits by endorsement, and **that renewal** will not be refused, until at least 30 days prior written notice has been given to Owner and Engineer and to each other additional insured (if any) to which a certificate of insurance has been issued.

G. At any time, Owner may request that Engineer or its Consultants, at Owner's sole expense, provide additional insurance coverage, increased limits, or revised deductibles that are more protective than those specified in Exhibit G. If so requested by Owner, and if commercially available, Engineer shall obtain and shall require its Consultants to obtain such additional insurance coverage, different limits, or revised deductibles for such periods of time as requested by Owner, and Exhibit G will be supplemented to incorporate these requirements.

6.05 *Suspension and Termination*

A. Suspension:

1. By Owner: Owner may suspend the Project for up to 90 days upon seven days written notice to Engineer.

Copyright © 2008 National Society of Professional Engineers for EJCDC. All rights reserved.

2. By Engineer: Engineer may, after giving seven days written notice to Owner, suspend services under this Agreement if Engineer's performance has been substantially delayed through no fault of Engineer.

B. *Termination*: The obligation to provide further services under this Agreement may be terminated:

1. For cause,

a. By either party upon ~~30~~ **7** days written notice in the event of substantial failure by the other party to perform in accordance with the terms hereof through no fault of the terminating party.

b. By Engineer:

1) upon seven days written notice if Owner demands that Engineer furnish or perform services contrary to Engineer's responsibilities as a licensed professional; or

2) upon seven days written notice if the Engineer's services for the Project are delayed or suspended for more than 90 days for reasons beyond Engineer's control.

3) Engineer shall have no liability to Owner on account of such termination.

c. Notwithstanding the foregoing, this Agreement will not terminate under Paragraph 6.05.B.1.a if the party receiving such notice begins, within seven days of receipt of such notice, to correct its substantial failure to perform and proceeds diligently to cure such failure within no more than 30 days of receipt thereof; provided, however, that if and to the extent such substantial failure cannot be reasonably cured within such 30 day period, and if such party has diligently attempted to cure the same and thereafter continues diligently to cure the same, then the cure period provided for herein shall extend up to, but in no case more than, 60 days after the date of receipt of the notice.

2. For convenience,

a. By Owner effective ~~30~~ **7 days** upon Engineer's receipt of notice from Owner.

C. *Effective Date of Termination*: The terminating party under Paragraph 6.05.B may set the effective date of termination at a time up to 30 days later than otherwise provided to allow Engineer to demobilize personnel and equipment from the Site, to complete tasks whose value would otherwise be lost, to prepare notes as to the status of completed and uncompleted tasks, and to assemble Project materials in orderly files.

D. Payments Upon Termination:

1. In the event of any termination under Paragraph 6.05, Engineer will be entitled to invoice Owner and to receive full payment for all services performed or furnished in accordance with this Agreement and all Reimbursable Expenses incurred through the effective date of termination. Upon making such payment, Owner shall have the limited right to the use of Documents, at Owner's sole risk, subject to the provisions of Paragraph 6.03.E.

2. In the event of termination by Owner for convenience or by Engineer for cause, Engineer shall be entitled, in addition to invoicing for those items identified in Paragraph 6.05.D.1, to invoice Owner and to payment of a reasonable amount for services and expenses directly attributable to termination, both before and after the effective date of termination, such as reassignment of

Copyright © 2008 National Society of Professional Engineers for EJCDC. All rights reserved.

personnel, costs of terminating contracts with Engineer's Consultants, and other related close-out costs, using methods and rates for Additional Services as set forth in Exhibit C.

6.06 *Controlling Law*

A. This Agreement is to be governed by the law of the state or jurisdiction in which the Project is located.

6.07 *Successors, Assigns, and Beneficiaries*

A. Owner and Engineer are hereby bound and the successors, executors, administrators, and legal representatives of Owner and Engineer (and to the extent permitted by Paragraph 6.07.B the assigns of Owner and Engineer) are hereby bound to the other party to this Agreement and to the successors, executors, administrators and legal representatives (and said assigns) of such other party, in respect of all covenants, agreements, and obligations of this Agreement.

B. Neither Owner nor Engineer may assign, sublet, or transfer any rights under or interest (including, but without limitation, moneys that are due or may become due) in this Agreement without the written consent of the other, except to the extent that any assignment, subletting, or transfer is mandated or restricted by law. Unless specifically stated to the contrary in any written consent to an assignment, no assignment will release or discharge the assignor from any duty or responsibility under this Agreement.

C. Unless expressly provided otherwise in this Agreement:

1. Nothing in this Agreement shall be construed to create, impose, or give rise to any duty owed by Owner or Engineer to any Contractor, Subcontractor, Supplier, other individual or entity, or to any surety for or employee of any of them.

2. All duties and responsibilities undertaken pursuant to this Agreement will be for the sole and exclusive benefit of Owner and Engineer and not for the benefit of any other party.

3. Owner agrees that the substance of the provisions of this Paragraph 6.07.C shall appear in the Contract Documents.

6.08 *Dispute Resolution*

A. Owner and Engineer agree to negotiate all disputes between them in good faith for a period of 30 days from the date of notice prior to invoking the procedures of Exhibit H or other provisions of this Agreement, or exercising their rights under law.

B. If the parties fail to resolve a dispute through negotiation under Paragraph 6.08.A, then either or both may invoke the procedures of Exhibit H. If Exhibit H is not included, or if no dispute resolution method is specified in Exhibit H, then the parties may exercise their rights under law.

6.09 *Environmental Condition of Site*

A. Owner has disclosed to Engineer in writing the existence of all known and suspected Asbestos, PCBs, Petroleum, Hazardous Waste, Radioactive Material, hazardous substances, and other Constituents of Concern located at or near the Site, including type, quantity, and location.

B. Owner represents to Engineer that to the best of its knowledge no Constituents of Concern, other than those disclosed in writing to Engineer, exist at the Site.

Copyright © 2008 National Society of Professional Engineers for EJCDC. All rights reserved.

C. If Engineer encounters or learns of an undisclosed Constituent of Concern at the Site, then Engineer shall notify (1) Owner and (2) appropriate governmental officials if Engineer reasonably concludes that doing so is required by applicable Laws or Regulations.

D. It is acknowledged by both parties that Engineer's scope of services does not include any services related to Constituents of Concern. If Engineer or any other party encounters an undisclosed Constituent of Concern, or if investigative or remedial action, or other professional services, are necessary with respect to disclosed or undisclosed Constituents of Concern, then Engineer may, at its option and without liability for consequential or any other damages, suspend performance of services on the portion of the Project affected thereby until Owner: (1) retains appropriate specialist consultants or contractors to identify and, as appropriate, abate, remediate, or remove the Constituents of Concern; and (2) warrants that the Site is in full compliance with applicable Laws and Regulations.

E. If the presence at the Site of undisclosed Constituents of Concern adversely affects the performance of Engineer's services under this Agreement, then the Engineer shall have the option of (1) accepting an equitable adjustment in its compensation or in the time of completion, or both; or (2) terminating this Agreement for cause on 30 days notice.

F. Owner acknowledges that Engineer is performing professional services for Owner and that Engineer is not and shall not be required to become an "owner" "arranger," "operator," "generator," or "transporter" of hazardous substances, as defined in the Comprehensive Environmental Response, Compensation, and Liability Act (CERCLA), as amended, which are or may be encountered at or near the Site in connection with Engineer's activities under this Agreement.

6.10 *Indemnification and Mutual Waiver*

A. *Indemnification by Engineer*: To the fullest extent permitted by law, Engineer shall indemnify and hold harmless Owner, and Owner's officers, directors, members, partners, agents, consultants, and employees from reasonable claims, costs, losses, and damages arising out of or relating to the Project, provided that any such claim, cost, loss, or damage is attributable to bodily injury, sickness, disease, or death, or to injury to or destruction of tangible property (other than the Work itself), including the loss of use resulting therefrom, but only to the extent caused by any negligent act or omission of Engineer or Engineer's officers, directors, members, partners, agents, employees, or Consultants. ~~**This indemnification provision is subject to and limited by the provisions, if any, agreed to by Owner and Engineer in Exhibit I, "Limitations of Liability."**~~

B. Indemnification by Owner: Owner shall indemnify and hold harmless Engineer and its officers, directors, members, partners, agents, employees, and Consultants as required by Laws and Regulations**.** ~~and to the extent (if any) required in Exhibit I, Limitations of Liability.~~

C. Environmental Indemnification: To the fullest extent permitted by law, Owner shall indemnify and hold harmless Engineer and its officers, directors, members, partners, agents, employees, and Consultants from and against any and all claims, costs, losses, and damages (including but not limited to all fees and charges of engineers, architects, attorneys and other professionals, and all court, arbitration, or other dispute resolution costs) caused by, arising out of, relating to, or resulting from a Constituent of Concern at, on, or under the Site, provided that (1) any such claim, cost, loss, or damage is attributable to bodily injury, sickness, disease, or death, or to injury to or destruction of tangible property (other than the Work itself), including the loss of use resulting therefrom, and (2) nothing in this paragraph shall obligate Owner to indemnify any individual or entity from and against the consequences of that individual's or entity's own negligence or willful misconduct.

D. Percentage Share of Negligence: To the fullest extent permitted by law, a party's total liability to the other party and anyone claiming by, through, or under the other party for any cost, loss, or damages caused

Copyright © 2008 National Society of Professional Engineers for EJCDC. All rights reserved.

in part by the negligence of the party and in part by the negligence of the other party or any other negligent entity or individual, shall not exceed the percentage share that the party's negligence bears to the total negligence of Owner, Engineer, and all other negligent entities and individuals.

E. Mutual Waiver: To the fullest extent permitted by law, Owner and Engineer waive against each other, and the other's employees, officers, directors, members, agents, insurers, partners, and consultants, any and all claims for or entitlement to special, incidental, indirect, or consequential damages arising out of, resulting from, or in any way related to the Project.

6.11 *Miscellaneous Provisions*

A. *Notices*: Any notice required under this Agreement will be in writing, addressed to the appropriate party at its address on the signature page and given personally, by facsimile, by registered or certified mail postage prepaid, or by a commercial courier service. All notices shall be effective upon the date of receipt.

B. *Survival*: All express representations, waivers, indemnifications, and limitations of liability included in this Agreement will survive its completion or termination for any reason.

C. *Severability*: Any provision or part of the Agreement held to be void or unenforceable under any Laws or Regulations shall be deemed stricken, and all remaining provisions shall continue to be valid and binding upon Owner and Engineer, which agree that the Agreement shall be reformed to replace such stricken provision or part thereof with a valid and enforceable provision that comes as close as possible to expressing the intention of the stricken provision.

D. *Waiver*: A party's non-enforcement of any provision shall not constitute a waiver of that provision, nor shall it affect the enforceability of that provision or of the remainder of this Agreement.

E. *Accrual of Claims*: To the fullest extent permitted by law, all causes of action arising under this Agreement shall be deemed to have accrued, and all statutory periods of limitation shall commence, no later than the date of Substantial Completion.

ARTICLE 7 – DEFINITIONS

7.01 *Defined Terms*

A. Wherever used in this Agreement (including the Exhibits hereto) terms (including the singular and plural forms) printed with initial capital letters have the meanings indicated in the text above, in the exhibits, or in the following provisions:

1. *Additional Services* – The services to be performed for or furnished to Owner by Engineer in accordance with ~~Part 2 of~~ Exhibit A of this Agreement.

2. *Agreement* – This written contract for professional services between Owner and Engineer, including all exhibits identified in Paragraph 8.01 and any duly executed amendments.

3. *Asbestos* – Any material that contains more than one percent asbestos and is friable or is releasing asbestos fibers into the air above current action levels established by the United States Occupational Safety and Health Administration.

4. *Basic Services* – The services to be performed for or furnished to Owner by Engineer in accordance with ~~Part 1 of~~ Exhibit A of this Agreement.

Copyright © 2008 National Society of Professional Engineers for EJCDC. All rights reserved.

5. *Construction Contract* – The entire and integrated written agreement between Owner and Contractor concerning the Work.

6. *Construction Cost* – The cost to Owner of those portions of the entire Project designed or specified by Engineer. Construction Cost does not include costs of services of Engineer or other design professionals and consultants; cost of land or rights-of-way, or compensation for damages to properties; Owner's costs for legal, accounting, insurance counseling or auditing services; interest or financing charges incurred in connection with the Project; or the cost of other services to be provided by others to Owner pursuant to Exhibit B of this Agreement. Construction Cost is one of the items comprising Total Project Costs.

7. *Constituent of Concern* – Any substance, product, waste, or other material of any nature whatsoever (including, but not limited to, Asbestos, Petroleum, Radioactive Material, and PCBs) which is or becomes listed, regulated, or addressed pursuant to (a) the Comprehensive Environmental Response, Compensation and Liability Act, 42 U.S.C. §§9601 et seq. ("CERCLA"); (b) the Hazardous Materials Transportation Act, 49 U.S.C. §§1801 et seq.; (c) the Resource Conservation and Recovery Act, 42 U.S.C. §§6901 et seq. ("RCRA"); (d) the Toxic Substances Control Act, 15 U.S.C. §§2601 et seq.; (e) the Clean Water Act, 33 U.S.C. §§1251 et seq.; (f) the Clean Air Act, 42 U.S.C. §§7401 et seq.; and (g) any other federal, state, or local statute, law, rule, regulation, ordinance, resolution, code, order, or decree regulating, relating to, or imposing liability or standards of conduct concerning, any hazardous, toxic, or dangerous waste, substance, or material.

8. *Consultants* – Individuals or entities having a contract with Engineer to furnish services with respect to this Project as Engineer's independent professional associates and consultants; subcontractors; or vendors.

9. *Contract Documents* – Those items so designated in the Construction Contract, including the Drawings, Specifications, construction agreement, and general and supplementary conditions. Only printed or hard copies of the items listed in the Construction Contract are Contract Documents. ~~Approved~~**Reviewed** Shop Drawings, other Contractor submittals, and the reports and drawings of subsurface and physical conditions are not Contract Documents.

10. *Contractor* – The entity or individual with which Owner has entered into a Construction Contract.

11. *Documents* – Data, reports, Drawings, Specifications, Record Drawings, and other deliverables, whether in printed or electronic media format, provided or furnished in appropriate phases by Engineer to Owner pursuant to this Agreement.

12. *Drawings* – That part of the Contract Documents prepared or approved by Engineer which graphically shows the scope, extent, and character of the Work to be performed by Contractor. Shop Drawings are not Drawings as so defined.

13. *Effective Date* – The date indicated in this Agreement on which it becomes effective, but if no such date is indicated, the date on which this Agreement is signed and delivered by the last of the parties to sign and deliver.

14. *Engineer* – The individual or entity named as such in this Agreement.

15. *Hazardous Waste* – The term Hazardous Waste shall have the meaning provided in Section 1004 of the Solid Waste Disposal Act (42 USC Section 6903) as amended from time to time.

Copyright © 2008 National Society of Professional Engineers for EJCDC. All rights reserved.

16. *Laws and Regulations; Laws or Regulations* – Any and all applicable laws, rules, regulations, ordinances, codes, and orders of any and all governmental bodies, agencies, authorities, and courts having jurisdiction.

17. *Owner* – The individual or entity with which Engineer has entered into this Agreement and for which the Engineer's services are to be performed. Unless indicated otherwise, this is the same individual or entity that will enter into any Construction Contracts concerning the Project.

18. *PCBs* – Polychlorinated biphenyls.

19. *Petroleum* – Petroleum, including crude oil or any fraction thereof which is liquid at standard conditions of temperature and pressure (60 degrees Fahrenheit and 14.7 pounds per square inch absolute), such as oil, petroleum, fuel oil, oil sludge, oil refuse, gasoline, kerosene, and oil mixed with other non-hazardous waste and crude oils.

20. *Project* – The total construction of which the Work to be performed under the Contract Documents may be the whole, or a part.

21. *Radioactive Material* – Source, special nuclear, or byproduct material as defined by the Atomic Energy Act of 1954 (42 USC Section 2011 et seq.) as amended from time to time.

22. *Record Drawings* – Drawings depicting the completed Project, prepared by Engineer as an Additional Service and based solely on Contractor's record copy of all Drawings, Specifications, addenda, change orders, work change directives, field orders, and written interpretations and clarifications, as delivered to Engineer and annotated by Contractor to show changes made during construction.

23. *Reimbursable Expenses* – The expenses incurred directly by Engineer in connection with the performing or furnishing of Basic and Additional Services for the Project.

24. *Resident Project Representative* – The authorized representative of Engineer assigned to assist Engineer at the Site during the Construction Phase. As used herein, the term Resident Project Representative or "RPR" includes any assistants or field staff of Resident Project Representative agreed to by Owner. The duties and responsibilities of the Resident Project Representative, if any, are as set forth in Exhibit D.

25. *Samples* – Physical examples of materials, equipment, or workmanship that are representative of some portion of the Work and which establish the standards by which such portion of the Work will be judged.

26. *Shop Drawings* – All drawings, diagrams, illustrations, schedules, and other data or information which are specifically prepared or assembled by or for Contractor and submitted by Contractor to illustrate some portion of the Work.

27. *Site* – Lands or areas to be indicated in the Contract Documents as being furnished by Owner upon which the Work is to be performed, including rights-of-way and easements for access thereto, and such other lands furnished by Owner which are designated for the use of Contractor.

28. *Specifications* – That part of the Contract Documents consisting of written technical descriptions of materials, equipment, systems, standards, and workmanship as applied to the Work and certain administrative details applicable thereto.

Copyright © 2008 National Society of Professional Engineers for EJCDC. All rights reserved.

29. *Subcontractor* – An individual or entity having a direct contract with Contractor or with any other Subcontractor for the performance of a part of the Work at the Site.

30. *Substantial Completion* – The time at which the Work (or a specified part thereof) has progressed to the point where, in the opinion of Engineer, the Work (or a specified part thereof) is sufficiently complete, in accordance with the Contract Documents, so that the Work (or a specified part thereof) can be utilized for the purposes for which it is intended. The terms "substantially complete" and "substantially completed" as applied to all or part of the Work refer to Substantial Completion thereof.

31. *Supplier* – A manufacturer, fabricator, supplier, distributor, materialman, or vendor having a direct contract with Contractor or with any Subcontractor to furnish materials or equipment to be incorporated in the Work by Contractor or Subcontractor.

32. *Total Project Costs* – The sum of the Construction Cost, allowances for contingencies, and the total costs of services of Engineer or other design professionals and consultants, together with such other Project-related costs that Owner furnishes for inclusion, including but not limited to cost of land, rights-of-way, compensation for damages to properties, Owner's costs for legal, accounting, insurance counseling and auditing services, interest and financing charges incurred in connection with the Project, and the cost of other services to be provided by others to Owner pursuant to Exhibit B of this Agreement.

33. *Work* – The entire construction or the various separately identifiable parts thereof required to be provided under the Contract Documents. Work includes and is the result of performing or providing all labor, services, and documentation necessary to produce such construction, and furnishing, installing, and incorporating all materials and equipment into such construction, all as required by the Contract Documents.

ARTICLE 8 – EXHIBITS AND SPECIAL PROVISIONS

8.01 *Exhibits Included:*

A. Exhibit A, Engineer's Services.

B. Exhibit B, Owner's Responsibilities.

C. Exhibit C, Payments to Engineer for Services and Reimbursable Expenses.

D. Exhibit D, Duties, Responsibilities and Limitations of Authority of Resident Project Representative. **NOT INCLUDED**

E. Exhibit E, Notice of Acceptability of Work. **NOT INCLUDED**

F. Exhibit F, Construction Cost Limit. **NOT INCLUDED**

G. Exhibit G, Insurance.

H. Exhibit H, Dispute Resolution.

I. Exhibit I, Limitations of Liability. **NOT INCLUDED**

J. Exhibit J, Special Provisions. **NOT INCLUDED**

Copyright © 2008 National Society of Professional Engineers for EJCDC. All rights reserved.

K. Exhibit K, Amendment to Owner-Engineer Agreement.

8.02 *Total Agreement:*

A. This Agreement, (together with the exhibits identified above) constitutes the entire agreement between Owner and Engineer and supersedes all prior written or oral understandings. This Agreement may only be amended, supplemented, modified, or canceled by a duly executed written instrument based on the format of Exhibit K to this Agreement.

8.03 *Designated Representatives:*

A. With the execution of this Agreement, Engineer and Owner shall designate specific individuals to act as Engineer's and Owner's representatives with respect to the services to be performed or furnished by Engineer and responsibilities of Owner under this Agreement. Such an individual shall have authority to transmit instructions, receive information, and render decisions relative to the Project on behalf of the respective party whom the individual represents.

8.04 *Engineer's Certifications:*

A. Engineer certifies that it has not engaged in corrupt, fraudulent, or coercive practices in competing for or in executing the Agreement. For the purposes of this Paragraph 8.04:

1. "corrupt practice" means the offering, giving, receiving, or soliciting of any thing of value likely to influence the action of a public official in the selection process or in the Agreement execution;

2. "fraudulent practice" means an intentional misrepresentation of facts made (a) to influence the selection process or the execution of the Agreement to the detriment of Owner, or (b) to deprive Owner of the benefits of free and open competition;

3. "coercive practice" means harming or threatening to harm, directly or indirectly, persons or their property to influence their participation in the selection process or affect the execution of the Agreement.

Copyright © 2008 National Society of Professional Engineers for EJCDC. All rights reserved.

IN WITNESS WHEREOF, the parties hereto have executed this Agreement, the Effective Date of which is indicated on page 1.

Owner:	Engineer:
City of Peculiar, Missouri	Lamp, Rynearson & Associates, Inc., **dba Larkin Lamp Rynearson**
By:	By: **Loren M. Steenson, P.E.**
Title:	Title: **Senior Vice-President**
Date Signed:	Date Signed:
	Engineer License or Firm's Certificate No. **2013011903 valid to 12/31/15**
	State of: **Missouri**
Address for giving notices:	Address for giving notices:
250 S. Main Street	Lamp, Rynearson & Associates, Inc.
Peculiar, Missouri 64078	14710 West Dodge Road, Ste. 100
	Omaha, NE 68154-2027
Designated Representative (Paragraph 8.03.A):	Designated Representative (Paragraph 8.03.A):
Carl Brooks, P.E.	**Anthony P. O'Malley, P.E.**
Title: **City Engineer**	Title: **Water Group Leader**
Phone Number: **(816) 779-2228**	Phone Number: **(816) 823-7282**
Facsimile Number: **(816) 779-5213**	Facsimile Number: **(816) 361-0045**
E-Mail Address: **cbrooks@ cityofpeculiar.com**	E-Mail Address: **Tony.OMalley@LRA-Inc.com**

Copyright © 2008 National Society of Professional Engineers for EJCDC. All rights reserved.

EXHIBIT A
Engineer's Services

Engineer shall provide Basic and Additional Services as set forth below and in accordance with the schedule included at the end of this Exhibit A.

BASIC SERVICES

A1.01 *Study Phase* ***(Alignment Study and Design Memorandum)***

A. Engineer shall:

1. Consult with Owner to define and clarify Owner's requirements for the Project and available data.

2. Advise Owner of any need for Owner to provide data or services of the types described in Exhibit B which are not part of Engineer's Basic Services.

3. Identify, consult with, and analyze requirements of governmental authorities having jurisdiction to approve the portions of the Project designed or specified by Engineer, including but not limited to mitigating measures identified in the environmental assessment.

4. Identify and evaluate alternate solutions available to Owner and, after consultation with Owner, recommend to Owner those solutions which in Engineer's judgment meet Owner's requirements for the Project.

~~5.~~ Perform or provide the following additional Study Phase tasks or deliverables: **Go over alignment in the field with Owner representatives. Use hydraulic modeling to confirm pipe sizes. Meet with Owner and proposed water supplier to confirm connection point. Meet with Owner and MoDOT to discuss use of highway right-of-way where necessary.**

A1.02 *Preliminary Design Phase*

A. Engineer shall:

1. Prepare Preliminary Design Phase documents consisting of preliminary drawings of the Project.

2. Provide necessary field surveys and topographic and utility mapping for design purposes. Utility mapping will be based upon information obtained from utility owners.

3. Advise Owner if additional reports, data, information, or services of the types described in Exhibit B are necessary and assist Owner in obtaining such reports, data, information, or services.

4. Based on the information contained in the Preliminary Design Phase documents, prepare an opinion of probable Construction Cost and assist Owner in collating the various cost categories which comprise Total Project Costs.

5. Perform or provide the following additional Preliminary Design Phase tasks or deliverables: **Facilitate a utility coordination meeting. Facilitate a public meeting with Owner and affected property owners.**

6. Furnish review copies of the Preliminary Design Phase documents and any other deliverables to Owner and review them with Owner. Owner shall submit to Engineer any comments regarding the Preliminary Design Phase documents and any other deliverables.

7. Revise the Preliminary Design Phase documents and any other deliverables in response to Owner's comments, as appropriate, and furnish to Owner copies of the revised Preliminary Design Phase documents, opinion of probable Construction Cost, and any other deliverables.

B. Engineer's services under the Preliminary Design Phase will be considered complete on the date when the revised Preliminary Design Phase documents, opinion of probable Construction Cost, and any other deliverables have been delivered to Owner.

A1.03 *Final Design Phase*

A. After acceptance by Owner of the Preliminary Design Phase documents, opinion of probable Construction Cost as determined in the Preliminary Design Phase, and any other deliverables subject to any Owner-directed modifications or changes in the scope, extent, character, or design requirements of or for the Project, and upon written authorization from Owner, Engineer shall:

1. Prepare final Drawings and Specifications indicating the scope, extent, and character of the Work to be performed and furnished by Contractor.

2. Provide technical criteria, written descriptions, and design data for Owner's use in filing applications for permits from or approvals of governmental authorities having jurisdiction to review or approve the final design of the Project; assist Owner in consultations with such authorities; and revise the Drawings and Specifications in response to directives from such authorities.

3. Advise Owner of any adjustments to the opinion of probable Construction Cost known to Engineer.

4. Perform or provide the following additional Final Design Phase tasks or deliverables: **Submit final plans and specifications with hydraulics and a construction permit application to the MoDNR. Prepare a Storm Water Pollution Prevention Plan (SWPPP) per MoDNR requirements. In bid documents, require contractor to video project route prior to initiating construction.**

5. Prepare and furnish bidding documents for review by Owner, its legal counsel, and other advisors, and assist Owner in the preparation of other related documents. Following receipt, Owner shall submit to Engineer any comments or instructions for revisions.

6. Revise the bidding documents in accordance with comments and instructions from the Owner, as appropriate, and submit final copies of the bidding documents, a revised opinion of probable Construction Cost, and any other deliverables to Owner.

B. Engineer's services under the Final Design Phase will be considered complete on the date when the submittals required by Paragraph A1.03.A.6 have been delivered to Owner.

A1.04 *Bidding or Negotiating Phase*

A. After acceptance by Owner of the bidding documents and the most recent opinion of probable Construction Cost as determined in the Final Design Phase, and upon written authorization by Owner to proceed, Engineer shall:

1. Assist Owner in advertising for and obtaining bids or proposals for the Work and, where applicable, maintain a record of prospective bidders to whom Bidding Documents have been issued, attend pre-bid conferences, if any, and receive and process contractor deposits or charges for the bidding documents.

2. Issue addenda as appropriate to clarify, correct, or change the bidding documents.

3. Provide information or assistance needed by Owner in the course of any negotiations with prospective contractors.

4. Consult with Owner as to the acceptability of subcontractors, suppliers, and other individuals and entities proposed by prospective contractors for those portions of the Work as to which such acceptability is required by the bidding documents.

5. If bidding documents require, the Engineer shall evaluate and determine the acceptability of "or equals" and substitute materials and equipment proposed by bidders, but subject to the provisions of paragraph A2.02.A.2 of this Exhibit A.

6. ~~Attend the Bid opening, prepare Bid tabulation sheets, and a~~**A**ssist Owner in evaluating Bids or proposals and in assembling and awarding contracts for the Work.

7. Perform or provide the following additional Bidding or Negotiating Phase tasks or deliverables: None.[A1]

~~B.~~ The Bidding or Negotiating Phase will be considered complete upon commencement of the Construction Phase or upon cessation of negotiations with prospective contractors ~~(except as may be required if Exhibit F is a part of this Agreement).~~

A1.05 *Construction Phase*

A. Upon successful completion of the Bidding and Negotiating Phase, and upon written authorization from Owner, Engineer shall:

1. *General Administration of Construction Contract:* Consult with Owner and act as Owner's representative as provided in the Construction Contract. The extent and limitations of the duties, responsibilities, and authority of Engineer as assigned in the Construction Contract shall not be modified, except as Engineer may otherwise agree in writing. All of Owner's instructions to Contractor will be issued through Engineer, which shall have authority to act on behalf of Owner in dealings with Contractor to the extent provided in this Agreement and the Construction Contract except as otherwise provided in writing.

2. *Resident Project Representative (RPR):* **DELETED** ~~Provide the services of an RPR at the Site to assist the Engineer and to provide more extensive observation of Contractor's work. Duties, responsibilities, and authority of the RPR are as set forth in Exhibit D. The furnishing of such RPR's services will not limit, extend, or modify Engineer's responsibilities or authority except as expressly set forth in Exhibit D.~~ [~~*If Engineer will not be providing the services of an RPR, then delete this Paragraph 2 by inserting the word "DELETED" after the paragraph title, and do not include Exhibit D.*~~][A2]

3. *Selecting Independent Testing Laboratory:* Assist Owner in the selection of an independent testing laboratory to perform the services identified in Exhibit B, Paragraph B2.01.0.

4. *Pre-Construction Conference:* Participate in a Pre-Construction Conference prior to commencement of Work at the Site.

5. *Schedules:* Receive, review, and determine the acceptability of any and all schedules that Contractor is required to submit to Engineer, including the Progress Schedule, Schedule of Submittals, and Schedule of Values.

6. *Baselines and Benchmarks:* As appropriate, establish baselines and benchmarks for locating the Work which in Engineer's judgment are necessary to enable Contractor to proceed.

7. *Visits to Site and Observation of Construction:* In connection with observations of Contractor's Work while it is in progress:

   a. Make visits to the Site at intervals appropriate to the various stages of construction, as Engineer deems necessary, to observe as an experienced and qualified design professional the progress of Contractor's executed Work. Such visits and observations by Engineer, and the Resident Project Representative, if any, are not intended to be exhaustive or to extend to every aspect of Contractor's Work in progress or to involve detailed inspections of Contractor's Work in progress beyond the responsibilities specifically assigned to Engineer in this Agreement and the Contract Documents, but rather are to be limited to spot checking, selective sampling, and similar methods of general observation of the Work based on Engineer's exercise of professional judgment, as assisted by the Resident Project Representative, if any. Based on information obtained during such visits and observations, Engineer will determine in general if the Work is proceeding in accordance with the Contract Documents, and Engineer shall keep Owner informed of the progress of the Work.

   b. The purpose of Engineer's visits to, and representation by the Resident Project Representative, if any, at the Site, will be to enable Engineer to better carry out the duties and responsibilities assigned to and undertaken by Engineer during the Construction Phase, and, in addition, by the exercise of Engineer's efforts as an experienced and qualified design professional, to provide for Owner a greater degree of confidence that the completed Work will conform in general to the Contract Documents and that Contractor has implemented and maintained the integrity of the design concept of the completed Project as a functioning whole as indicated in the Contract Documents. Engineer shall not, during such visits or as a result of such observations of Contractor's Work in progress, supervise, direct, or have control over Contractor's Work, nor shall Engineer have authority over or responsibility for the means, methods, techniques, sequences, or procedures of construction selected or used by Contractor, for security or safety at the Site, for safety precautions and programs incident to Contractor's Work, nor for any failure of Contractor to comply with Laws and Regulations applicable to Contractor's furnishing and performing the Work. Accordingly, Engineer neither guarantees the performance of any Contractor nor assumes responsibility for any Contractor's failure to furnish or perform the Work in accordance with the Contract Documents.

8. *Defective Work:* Reject Work if, on the basis of Engineer's observations, Engineer believes that such Work (a) is defective under the standards set forth in the Contract Documents, (b) will not produce a completed Project that conforms to the Contract Documents, or (c) will imperil the integrity of the design concept of the completed Project as a functioning whole as indicated by the Contract Documents.

9. *Clarifications and Interpretations; Field Orders:* Issue necessary clarifications and interpretations of the Contract Documents as appropriate to the orderly completion of Contractor's work. Such clarifications and interpretations will be consistent with the intent of and reasonably inferable from the Contract Documents. Subject to any limitations in the Contract Documents, Engineer may issue field orders authorizing minor variations in the Work from the requirements of the Contract Documents.

10. *Requests for Information:* The Engineer shall provide, with reasonable promptness, written responses to "Requests for Information" from the Contractor for clarification and interpretation of the requirements of the Contract Documents. Such services shall be provided as part of the Engineer's basic services. However, if the Contractor's requests for information, clarification or interpretation are, in the Engineer's professional opinion, for information readily apparent from reasonable observation of field conditions or a review of the Contract Documents, or are reasonably inferable therefrom, the Engineer shall be entitled to compensation for Additional Services in accordance with Exhibit C, for the Engineer's time spent responding to such requests.

11. *Change Orders and Work Change Directives:* Recommend change orders and work change directives to Owner, as appropriate~~, and prepare change orders and work change directives as required~~.

12. *Shop Drawings and Samples:* Review or take other appropriate action in respect to Shop Drawings and Samples and other data which Contractor is required to submit, but only for conformance with the information given in the Contract Documents and compatibility with the design concept of the completed Project as a functioning whole as indicated by the Contract Documents. Such reviews and approvals or other action will not extend to means, methods, techniques, sequences, or procedures of construction or to safety precautions and programs incident thereto. Engineer shall meet any Contractor's submittal schedule that Engineer has accepted. Unless Engineer specifically requests that Shop Drawings be submitted for review, Engineer will not accept, review or transmit any Shop Drawing submittals not specifically requested.

13. *Substitutes and "or-equal":* Evaluate and determine the acceptability of substitute or "or-equal" materials and equipment proposed by Contractor, but subject to the provisions of Paragraph A2.02.A.2 of this Exhibit A.

14. *Inspections and Tests:* Require such special inspections or tests of Contractor's work as deemed reasonably necessary, and receive and review all certificates of inspections, tests, and approvals required by Laws and Regulations or the Contract Documents. Engineer's review of such certificates will be for the purpose of determining that the results certified indicate compliance with the Contract Documents and will not constitute an independent evaluation that the content or procedures of such inspections, tests, or approvals comply with the requirements of the Contract Documents. Engineer shall be entitled to rely on the results of such tests.

15. *Disagreements between Owner and Contractor*: Render formal written decisions on all duly submitted issues relating to the acceptability of Contractor's work or the interpretation of the requirements of the Contract Documents pertaining to the execution, performance, or progress of Contractor's Work; review each duly submitted Claim by Owner or Contractor, and in writing either deny such Claim in whole or in part, approve such Claim, or decline to resolve such Claim if Engineer in its discretion concludes that to do so would be inappropriate. In rendering such decisions, Engineer shall be fair and not show partiality to Owner or Contractor and shall not be liable in connection with any decision rendered in good faith in such capacity.

16. *Applications for Payment:* Based on Engineer's observations as an experienced and qualified design professional and on review of Applications for Payment and accompanying supporting documentation:

    a. Determine the amounts that Engineer recommends Contractor be paid. Such recommendations of payment will be in writing and will constitute Engineer's representation to Owner, based on such observations and review, that, to the best of Engineer's knowledge, information and belief, Contractor's Work has progressed to the point indicated, the Work is generally in accordance with the Contract Documents (subject to an evaluation of the Work as a functioning whole prior to or upon Substantial Completion, to the results of any subsequent tests called for in the Contract Documents, and to any other qualifications stated in the recommendation), and the conditions precedent to Contractor's being entitled to such payment appear to have been fulfilled in so far as it is Engineer's responsibility to observe Contractor's Work. In the case of unit price work, Engineer's recommendations of payment will include final determinations of quantities and classifications of Contractor's Work (subject to any subsequent adjustments allowed by the Contract Documents).

    b. By recommending any payment, Engineer shall not thereby be deemed to have represented that observations made by Engineer to check the quality or quantity of Contractor's Work as it is performed and furnished have been exhaustive, extended to every aspect of Contractor's Work in progress, or involved detailed inspections of the Work beyond the responsibilities specifically assigned to Engineer in this Agreement and the Contract Documents. Neither Engineer's review of Contractor's Work for the purposes of recommending payments nor Engineer's recommendation of any payment including final payment will impose on Engineer responsibility to supervise, direct, or

control Contractor's Work in progress or for the means, methods, techniques, sequences, or procedures of construction or safety precautions or programs incident thereto, or Contractor's compliance with Laws and Regulations applicable to Contractor's furnishing and performing the Work. It will also not impose responsibility on Engineer to make any examination to ascertain how or for what purposes Contractor has used the moneys paid on account of the Contract Price, or to determine that title to any portion of the Work in progress, materials, or equipment has passed to Owner free and clear of any liens, claims, security interests, or encumbrances, or that there may not be other matters at issue between Owner and Contractor that might affect the amount that should be paid.

17. *Contractor's Completion Documents:* Receive, review, and transmit to Owner maintenance and operating instructions, schedules, guarantees, bonds, certificates or other evidence of insurance required by the Contract Documents, certificates of inspection, tests and approvals, Shop Drawings, Samples and other data approved as provided under Paragraph A1.05.A.11, and transmit the annotated record documents which are to be assembled by Contractor in accordance with the Contract Documents to obtain final payment. The extent of such review by Engineer will be limited as provided in Paragraph A1.05.A.11. Unless Engineer specifically requests that Shop Drawings be submitted for review, Engineer will not accept, review or transmit any Shop Drawing submittals not specifically requested.

18. *Substantial Completion:* Promptly after notice from Contractor that Contractor considers the entire Work ready for its intended use, in company with Owner and Contractor, visit the Project to determine if the Work is substantially complete. If after considering any objections of Owner, Engineer considers the Work substantially complete, Engineer shall deliver a Statement of Completion to Owner.

19. *Additional Tasks:* Perform or provide the following additional Construction Phase tasks or deliverables: **Preparation of Record Drawings based on Contractor's and Owner's representative's mark-ups. Furnish two sets to the City and an electronic copy.**

20. *Final Payment to Contractor:* Conduct a final visit to the Project to determine if the completed Work of Contractor is acceptable so that Engineer may recommend, in writing, final payment to Contractor.

B. *Duration of Construction Phase:* The Construction Phase will commence with the execution of the first Construction Contract for the Project or any part thereof and will terminate upon written recommendation by Engineer for final payment to Contractors.

C. *Limitation of Responsibilities:* Engineer shall not be responsible for the acts or omissions of any Contractor, Subcontractor or Supplier, or other individuals or entities performing or furnishing any of the Work, for safety or security at the Site, or for safety precautions and programs incident to Contractor's Work, during the Construction Phase or otherwise. Engineer shall not be responsible for the failure of any Contractor to perform or furnish the Work in accordance with the Contract Documents.

ADDITIONAL SERVICES

A2.01 *Additional Services Requiring Owner's Written Authorization*

A. If authorized in writing by Owner, Engineer shall furnish or obtain from others Additional Services of the types listed below.

1. Preparation of applications and supporting documents (in addition to those furnished under Basic Services) for private or governmental grants, loans, or advances in connection with the Project; preparation or review of environmental assessments and impact statements; review and evaluation of the effects on the design requirements for the Project of any such statements and documents prepared by others; and assistance in obtaining approvals of authorities having jurisdiction over the anticipated environmental impact of the Project.

2. Services to make measured drawings of or to investigate existing conditions or facilities, or to verify the accuracy of drawings or other information furnished by Owner or others.

3. Services resulting from significant changes in the scope, extent, or character of the portions of the Project designed or specified by Engineer or its design requirements including, but not limited to, changes in size, complexity, Owner's schedule, character of construction, or method of financing; and revising previously accepted studies, reports, Drawings, Specifications, or Contract Documents when such revisions are required by changes in Laws and Regulations enacted subsequent to the Effective Date or are due to any other causes beyond Engineer's control.

4. Services resulting from Owner's request to evaluate additional Study Phase alternative solutions beyond those identified in Paragraph A1.01.A.4.

5. Services required as a result of Owner's providing incomplete or incorrect Project information to Engineer.

6. Providing renderings or models for Owner's use.

7. Undertaking investigations and studies including, but not limited to, detailed consideration of operations, maintenance, and overhead expenses; the preparation of financial feasibility and cash flow studies, rate schedules, and appraisals; assistance in obtaining financing for the Project; evaluating processes available for licensing, and assisting Owner in obtaining process licensing; detailed quantity surveys of materials, equipment, and labor; and audits or inventories required in connection with construction performed by Owner.

8. Furnishing services of Consultants for other than Basic Services.

9. Services during out-of-town travel required of Engineer other than for visits to the Site or Owner's office.

10. Preparing for, coordinating with, participating in and responding to structured independent review processes, including, but not limited to, construction management, cost estimating, project peer review, value engineering, and constructability review requested by Owner; and performing or furnishing services required to revise studies, reports, Drawings, Specifications, or other Bidding Documents as a result of such review processes.

11. Preparing additional Bidding Documents or Contract Documents for alternate bids or prices requested by Owner for the Work or a portion thereof.

12. Assistance in connection with Bid protests, rebidding, or renegotiating contracts for construction, materials, equipment, or services.

13. Providing construction surveys and staking to enable Contractor to perform its work other than as required under Paragraph A1.05.A.6, and any type of property surveys or related engineering services needed for the transfer of interests in real property; and providing other special field surveys.

14. Providing Construction Phase services beyond the original date for completion and readiness for final payment of Contractor.

15. Providing assistance in responding to the presence of any Constituent of Concern at the Site, in compliance with current Laws and Regulations.

16. ~~Preparing Record Drawings showing appropriate record information based on Project annotated record documents received from Contractor, and furnishing such Record Drawings to Owner.~~

17. Preparation of operation and maintenance manuals.

18. Preparing to serve or serving as a consultant or witness for Owner in any litigation, arbitration, or other dispute resolution process related to the Project.

19. Providing more extensive services required to enable Engineer to issue notices or certifications requested by Owner.

20. Assistance in connection with the adjusting of Project equipment and systems.

21. Assistance to Owner in training Owner's staff to operate and maintain Project equipment and systems.

22. Assistance to Owner in developing procedures for (a) control of the operation and maintenance of Project equipment and systems, and (b) related record-keeping.

23. Overtime work requiring higher than regular rates.

24. . Other services performed or furnished by Engineer not otherwise provided for in this Agreement. **Including, but not limited to: Preparation of easement descriptions and exhibits, assistance in obtaining easements including ligitation if necessary, and Funding Agency administration during design and construction.**

A2.02 Additional Services Not Requiring Owner's Written Authorization

A. Engineer shall advise Owner in advance that Engineer is will immediately commence to perform or furnish the Additional Services of the types listed below. For such Additional Services, Engineer need not request or obtain specific advance written authorization from Owner. Engineer shall cease performing or furnishing such Additional Services upon receipt of written notice from Owner.

1. Services in connection with work change directives and change orders to reflect changes requested by Owner.

2. Services in making revisions to Drawings and Specifications occasioned by the acceptance of substitute materials or equipment other than "or-equal" items; services after the award of the Construction Contract in evaluating and determining the acceptability of a proposed "or equal" or substitution which is found to be inappropriate for the Project; evaluation and determination of an excessive number of proposed "or equals" or substitutions, whether proposed before or after award of the Construction Contract.

3. Services resulting from significant delays, changes, or price increases occurring as a direct or indirect result of materials, equipment, or energy shortages.

4. Additional or extended services during construction made necessary by (1) emergencies or acts of God endangering the Work (advance notice not required), (2) the presence at the Site of any Constituent of Concern or items of historical or cultural significance, (3) Work damaged by fire or other cause during construction, (4) a significant amount of defective, neglected, or delayed work by Contractor, (5) acceleration of the progress schedule involving services beyond normal working hours, or (6) default by Contractor.

5. Services in connection with any partial utilization of any part of the Work by Owner prior to Substantial Completion.

6. Evaluating an unreasonable claim or an excessive number of claims submitted by Contractor or others in connection with the Work.

7. Services during the Construction Phase rendered after the original date for completion of the Work referred to in A1.05.B.

8. Reviewing a Shop Drawing more than three times, as a result of repeated inadequate submissions by Contractor.

9. While at the Site, compliance by Engineer and its staff with those terms of Owner's or Contractor's safety program provided to Engineer subsequent to the Effective Date that exceed those normally required of engineering personnel by federal, state, or local safety authorities for similar construction sites.

SCHEDULE

Study Phase:	**(Alignment Study and Design Memorandum)**	**45 days**
Preliminary Design Phase:	**(Includes survey)**	**120 days**
Final Design Phase:		**60 days**
Bidding or Negotiation Phase:	**(After R.O.W. and permits are obtained)**	**45 days**
Construction Phase:	**(After Owner issues contractor's notice to proceed)**	**300 days**

(

This is **EXHIBIT B**, consisting of 3 pages, referred to in and part of the **Agreement between Owner and Engineer for Professional Services** dated _____, 2014.

Owner's Responsibilities

Article 2 of the Agreement is supplemented to include the following agreement of the parties.

B2.01 In addition to other responsibilities of Owner as set forth in this Agreement, Owner shall at its expense:

A. Provide Engineer with all criteria and full information as to Owner's requirements for the Project, including design objectives and constraints, space, capacity and performance requirements, flexibility, and expandability, and any budgetary limitations; and furnish copies of all design and construction standards which Owner will require to be included in the Drawings and Specifications; and furnish copies of Owner's standard forms, conditions, and related documents for Engineer to include in the Bidding Documents, when applicable.

B. Furnish to Engineer any other available information pertinent to the Project including reports and data relative to previous designs, or investigation at or adjacent to the Site.

C. Following Engineer's assessment of initially-available Project information and data and upon Engineer's request, furnish or otherwise make available such additional Project related information and data as is reasonably required to enable Engineer to complete its Basic and Additional Services. Such additional information or data would generally include the following:

1. Property descriptions.

2. Zoning, deed, and other land use restrictions.

3. Property, boundary, easement, right-of-way, and other special surveys or data, including establishing relevant reference points.

4. Explorations and tests of subsurface conditions at or contiguous to the Site, drawings of physical conditions relating to existing surface or subsurface structures at the Site, or hydrographic surveys, with appropriate professional interpretation thereof.

5. Environmental assessments, audits, investigations, and impact statements, and other relevant environmental or cultural studies as to the Project, the Site, and adjacent areas.

6. Data or consultations as required for the Project but not otherwise identified in the Agreement or the Exhibits thereto.

D. Give prompt written notice to Engineer whenever Owner observes or otherwise becomes aware of the presence at the Site of any Constituent of Concern, or of any other development that affects the scope or time of performance of Engineer's services, or any defect or nonconformance in Engineer's services, the Work, or in the performance of any Contractor.

E. Authorize Engineer to provide Additional Services as set forth in ~~Part 2 of~~ Exhibit A of the Agreement as required.

F. Arrange for safe access to and make all provisions for Engineer to enter upon public and private property as required for Engineer to perform services under the Agreement.

Copyright © 2008 National Society of Professional Engineers for EJCDC. All rights reserved.

G. Examine all alternate solutions, studies, reports, sketches, Drawings, Specifications, proposals, and other documents presented by Engineer (including obtaining advice of an attorney, insurance counselor, and other advisors or consultants as Owner deems appropriate with respect to such examination) and render in writing timely decisions pertaining thereto.

H. Provide reviews, approvals, and permits from all governmental authorities having jurisdiction to approve all phases of the Project designed or specified by Engineer and such reviews, approvals, and consents from others as may be necessary for completion of each phase of the Project.

I. Recognizing and acknowledging that Engineer's services and expertise do not include the following services, provide, as required for the Project:

1. Accounting, bond and financial advisory, independent cost estimating, and insurance counseling services.

2. Legal services with regard to issues pertaining to the Project as Owner requires, Contractor raises, or Engineer reasonably requests.

3. Such auditing services as Owner requires to ascertain how or for what purpose Contractor has used the moneys paid.

J. Place and pay for advertisement for Bids in appropriate publications.

K. Advise Engineer of the identity and scope of services of any independent consultants employed by Owner to perform or furnish services in regard to the Project, including, but not limited to, cost estimating, project peer review, value engineering, and constructability review.

L. Furnish to Engineer data as to Owner's anticipated costs for services to be provided by others (including, but not limited to, accounting, bond and financial, independent cost estimating, insurance counseling, and legal advice) for Owner so that Engineer may assist Owner in collating the various cost categories which comprise Total Project Costs.

M. If Owner designates a construction manager or an individual or entity other than, or in addition to, Engineer to represent Owner at the Site, define and set forth as an attachment to this Exhibit B the duties, responsibilities, and limitations of authority of such other party and the relation thereof to the duties, responsibilities, and authority of Engineer.

N. If more than one prime contract is to be awarded for the Work designed or specified by Engineer, designate a person or entity to have authority and responsibility for coordinating the activities among the various prime Contractors, and define and set forth the duties, responsibilities, and limitations of authority of such individual or entity and the relation thereof to the duties, responsibilities, and authority of Engineer as an attachment to this Exhibit B that is to be mutually agreed upon and made a part of this Agreement before such services begin.

O. Attend the pre-bid conference, bid opening, pre-construction conferences, construction progress and other job related meetings, and Substantial Completion and final payment visits to the Project.

P. Provide the services of an independent testing laboratory to perform all inspections, tests, and approvals of samples, materials, and equipment required by the Contract Documents, or to evaluate the performance of materials, equipment, and facilities of Owner, prior to their incorporation into the Work with appropriate professional interpretation thereof.

Copyright © 2008 National Society of Professional Engineers for EJCDC. All rights reserved.

Q. Provide Engineer with the findings and reports generated by the entities providing services to Owner pursuant to this paragraph.

R. Inform Engineer in writing of any specific requirements of safety or security programs that are applicable to Engineer, as a visitor to the Site.

S. Perform or provide the following additional services: **Including, but not limited to, obtaining easements on private and/or public right-of-way where identified as necessary by the ENGINEER during the design phase, opening bids, preparation of bid tabulation, change orders, work change directives, and preconstruction minutes. Providing resident project representative inspection.**

Copyright © 2008 National Society of Professional Engineers for EJCDC. All rights reserved.

EXHIBIT C

Payments to Engineer for Services and Reimbursable Expenses

C1.01 *Compensation for Basic Services (including Resident Project Representative) – Standard Hourly Rate Method of Payment* ***with Maximum Fee Limit.***

A. Owner shall pay Engineer for Basic Services set forth in Exhibit A, including for services of Engineer's Resident Project Representative, if any, as follows:

1. An amount equal to the cumulative hours charged to the Project by each class of Engineer's personnel times Standard Hourly Rates for each applicable billing class for all services performed on the Project, plus Reimbursable Expenses and Engineer's Consultants' charges, if any.

2. Engineer's Reimbursable Expenses Schedule and Standard Hourly Rates are set forth in Paragraph C1.06 and Paragraph C1.07, respectively.

3. The total compensation for services under Paragraph C1.01 is **limited** ~~estimated~~ to **maximum of** ~~be~~ $ **378,344.00** based on the following estimated distribution of compensation:

a.	**Engineering Planning and Design**	$ **216,262.00**
b.	**Engineering – Surveying**	$ **140,237.00**
c.	**Construction Administration**	$ **21,845.00**

4. Engineer may alter the distribution of compensation between individual phases of the work noted herein to be consistent with services actually rendered, but shall not exceed the total estimated compensation amount unless approved in writing by Owner. See also C1.03.C.2 below.

5. The total estimated compensation for Engineer's services included in the breakdown by phases as noted in Paragraph C1.01.A.3 incorporates all labor, overhead, profit, Reimbursable Expenses and Engineer's Consultants' charges.

6. The amounts billed for Engineer's services under Paragraph C1.01 will be based on the cumulative hours charged to the Project during the billing period by each class of Engineer's employees times Standard Hourly Rates for each applicable billing class, plus Reimbursable Expenses and Engineer's Consultants' charges.

7. The Standard Hourly Rates and Reimbursable Expenses Schedule will be adjusted annually (as of April 1) to reflect equitable changes in the compensation payable to Engineer.

C1.02 *Compensation For Reimbursable Expenses*

A. Owner shall pay Engineer for all Reimbursable Expenses at the rates set forth in Paragraph C1.06.

B. Reimbursable Expenses include the following categories: transportation and subsistence incidental thereto; providing and maintaining field office facilities including furnishings and utilities; toll telephone calls and mobile phone charges; reproduction of reports, Drawings, Specifications, Bidding Documents, and similar Project-related items in addition to those required under Exhibit A. In addition, if authorized in advance by Owner, Reimbursable Expenses will also include expenses incurred for the use of highly specialized equipment.

C. The amounts payable to Engineer for Reimbursable Expenses will be the Project-related internal expenses actually incurred or allocated by Engineer, plus all invoiced external Reimbursable Expenses allocable to the Project, the latter multiplied by a factor of 1.15.

C1.03 *Compensation For Standard Hourly Rate Payments:*

A. Owner shall pay Engineer an amount equal to the cumulative hours charged to the Project by each class of Engineer's personnel times Standard Hourly Rates for each applicable billing class for all services performed on the Project at the rates set forth in Paragraph C1.07.

C1.04 *Other Provisions Concerning Payment*

A. Whenever Engineer is entitled to compensation for the charges of Engineer's Consultants, those charges shall be the amounts billed by Engineer's Consultants to Engineer times a factor of 1.0.

B. Factors. The external Reimbursable Expenses and Engineer's Consultants' factors include Engineer's overhead and profit associated with Engineer's responsibility for the administration of such services and costs.

C. Estimated Compensation Amounts:

1. Engineer's estimate of the amounts that will become payable for specified services are only estimates for planning purposes, are not binding on the parties, and are not the minimum or maximum amounts payable to Engineer under the Agreement.

2. When estimated compensation amounts have been stated herein and it subsequently becomes apparent to Engineer that the total compensation amount thus estimated will be exceeded, Engineer shall give Owner written notice thereof, allowing Owner to consider its options, including suspension or termination of Engineer's services for Owner's convenience. Upon notice, Owner and Engineer promptly shall review the matter of services remaining to be performed and compensation for such services. Owner shall either exercise its right to suspend or terminate Engineer's services for Owner's convenience, agree to such compensation exceeding said estimated amount, or agree to a reduction in the remaining services to be rendered by Engineer, so that total compensation for such services will not exceed said estimated amount when such services are completed. If Owner decides not to suspend the Engineer's services during the negotiations and Engineer exceeds the estimated amount before Owner and Engineer have agreed to an increase in the compensation due Engineer or a reduction in the remaining services, then Engineer shall be paid for all services rendered hereunder.

D. To the extent necessary to verify Engineer's charges and upon Owner's timely request, Engineer shall make copies of such records available to Owner at cost.

C1.05 Compensation for Additional Services

A. Owner shall pay Engineer for Additional Services, if any, as follows:

1. General: For services of Engineer's personnel engaged directly on the Project pursuant to Exhibit A, except for services as a consultant or witness under Exhibit A, (which if needed shall be separately negotiated based on the nature of the required consultation or testimony) an amount equal to the cumulative hours charged to the Project by each class of Engineer's personnel times Standard Hourly Rates for each applicable billing class for all Additional Services performed on the Project, plus related Reimbursable Expenses and Engineer's Consultant's charges, if any.

B. Compensation For Reimbursable Expenses:

1. For those Reimbursable Expenses that are not accounted for in the compensation for Basic Services under Paragraph C1.01 and are directly related to the provision of Additional Services, Owner shall pay Engineer at the rates set forth in Paragraph C1.06.

2. Reimbursable Expenses include the following categories: transportation and subsistence incidental thereto; providing and maintaining field office facilities including furnishings and utilities; toll telephone calls and mobile phone charges; reproduction of reports, Drawings, Specifications, Bidding Documents, and similar Project-related items in addition to those required under Exhibit A. In addition, if authorized in advance by Owner, Reimbursable Expenses will also include expenses incurred for the use of highly specialized equipment.

3. The amounts payable to Engineer for Reimbursable Expenses, if any, will be the Additional Services-related internal expenses actually incurred or allocated by Engineer, plus all invoiced external Reimbursable Expenses allocable to such Additional Services, the latter multiplied by a factor of 1.15.

4. The Reimbursable Expenses Schedule will be adjusted annually (as of April 1) to reflect equitable changes in the compensation payable to Engineer.

C. Compensation For Standard Hourly Rate Payments:

1. For Additional Services, Owner shall pay Engineer an amount equal to the cumulative hours charged to the Project by each class of Engineer's personnel times Standard Hourly Rates for each applicable billing class for all services performed on the Project at the rates set forth in Paragraph C1.07.

D. Other Provisions Concerning Payment For Additional Services:

1. Whenever Engineer is entitled to compensation for the charges of Engineer's Consultants, those charges shall be the amounts billed by Engineer's Consultants to Engineer times a factor of 1.0.

2. Factors: The external Reimbursable Expenses and Engineer's Consultant's Factors include Engineer's overhead and profit associated with Engineer's responsibility for the administration of such services and costs.

3. To the extent necessary to verify Engineer's charges and upon Owner's timely request, Engineer shall make copies of such records available to Owner at cost.

C1.06 Reimbursable Expenses Schedule

Current agreements for engineering services stipulate that the Reimbursable Expenses are subject to review and adjustment per Exhibit C. Reimbursable expenses for services performed on the date of the Agreement are:

Schedule #2 **3/30/14 – 03/28/15**

LAMP, RYNEARSON & ASSOCIATES, INC.
MISCELLANEOUS CHARGES

A. SUBSISTENCE:
Subsistence for employees away from headquarters shall be chargeable in accordance with the per diem schedule of the U.S. General Services Administration available at www.gsa.gov.

B. TRANSPORTATION:

Automobile transportation shall be charged for at the maximum IRS employee reimbursable rate per mile plus 15% for travel in connection with work on the project. Costs to Lamp, Rynearson & Associates, Inc., for commercial travel shall be chargeable at the actual cost incurred by Lamp, Rynearson & Associates, Inc.

C. MATERIALS:

All materials other than normal office supplies which are used by Lamp, Rynearson & Associates, Inc., in connection with the rendering of services shall be chargeable at actual cost plus 15 percent to cover general overhead and administration.

D. REPRODUCTIONS AND PLOTS:

All reproduction and plotting work performed by Lamp, Rynearson & Associates, Inc., shall be charged at the locally accepted commercial rate for such work. All outside photographic and direct-process reproduction costs advanced by Lamp, Rynearson & Associates, Inc., in connection with the rendering of services shall be charged at actual cost plus 15 percent to cover general overhead and administration.

E. SPECIAL EQUIPMENT:

The following items of special equipment, when used by Lamp, Rynearson & Associates, Inc., shall be charged for at the following rates:

Item	$ - Hourly Rate
Electronic Total Station	$15 - $25 /Hour
Robotic Total Station	$30 /Hour
w/RCS GPS Rover	$22 – $33 /Hour
GPS Base & Rover	$25 - $62 /Hour
4x4 ATV Polaris Ranger	$20 /Hour
Plots (Color) bond	$2.50 /SF
Plots (Color) mylar	$6.00 /SF
Plots (Color) photo paper	$6.00 /SF

All of the above rates are exclusive of operator.

Specialty material exclusive of above Plotter Rates.

F. FILING FEES AND OTHER COSTS ADVANCED:

All filing or permit fees and other similar outside costs which are advanced or paid by Lamp, Rynearson & Associates, Inc., shall be chargeable at actual cost plus 15 percent to cover general overhead and administration.

Periodically, this schedule may be revised and updated by Lamp, Rynearson & Associates, Inc., who reserves the right to substitute the new miscellaneous charges schedule upon 30 days' notice.

C1.07 Standard Hourly Rates Schedule

E. Standard Hourly Rates:

1. **Standard Hourly Rates include salaries and wages paid to personnel in each billing class plus the cost of customary and statutory benefits, general and administrative overhead, non-project operating costs, and operating margin or profit.**

2. **The Standard Hourly Rates will be adjusted annually (as of April 1) to reflect equitable changes in the compensation payable to the Engineer.**

3. **The Standard Hourly Rates apply only as specified in Exhibit C.**

F. Schedule:

Hourly rates for services performed on or after the date of the Agreement:

Lamp, Rynearson & Associates, Inc.	
HOURLY RATE SCHEDULE	
March 30, 2014 – March 28, 2015	
Position / Title	$ - Hourly Rate
Principal II	218.00
Sr. Group Leader III	216.00
Project Manager I	117.00
Sr. Project Manager II	143.00
Sr. Project Engr II	115.00
GIS Specialist III	86.00
Project Designer II	82.00
Sr. Project Designer III	131.00
Engineering Tech II	71.00
Construction Observer IV	78.00
Survey Project Mgr III	116.00
Sr. Survey Project Mgr I	126.00
Survey Technician II	73.00
Party Chief I	67.00
Party Chief II	75.00
Party Chief III	83.00
Survey Field Tech Apprentice	36.00
Survey Field Tech I	54.00
Survey Field Tech II	59.00
Survey Field Tech III	66.00
Administrative Assistant II	59.00

These charges include full compensation for payroll costs, general overhead, administration and anticipated profit on labor. Charges for items other than labor which are applicable to the project are listed on Schedule #2.

Personnel usually perform duties related to their classification; however, in the interest of efficiency, personnel with diversified experience may perform several types of work; in all cases, charges will be made according to payroll classification and not according to the type of work performed.

This is **EXHIBIT G**, consisting of __2__ pages, referred to in and part of the **Agreement between Owner and Engineer for Professional Services** dated _____, __2014__.

Insurance

Paragraph 6.04 of the Agreement is supplemented to include the following agreement of the parties.

G6.04 *Insurance*

A. The limits of liability for the insurance required by Paragraph 6.04.A and 6.04.B of the Agreement are as follows:

1. By Engineer:

a. Workers' Compensation: Statutory

b. Employer's Liability --

1) Each Accident: $100,000
2) Disease, Policy Limit: $500,000
3) Disease, Each Employee: $100,000

c. General Liability --

1) Each Occurrence (Bodily Injury and Property Damage): $1,000,000
2) General Aggregate: $2,000,000

d. Excess or Umbrella Liability --

1) Each Occurrence: $1,000,000
2) General Aggregate: $1,000,000

e. Automobile Liability --Combined Single Limit (Bodily Injury and Property Damage):

Each Accident $1,000,000

f. Professional Liability –

1) Each Claim Made $1,000,000
2) Annual Aggregate $1,000,000

Engineer agrees to maintain continuous professional liability coverage for the period of design and construction of this project, and for a period of two years following substantial completion.

g. Other (specify): $_____

2. By Owner:

a. Workers' Compensation: Statutory

Copyright © 2008 National Society of Professional Engineers for EJCDC. All rights reserved.

b. Employer's Liability --

1) Each Accident	$100,000
2) Disease, Policy Limit	$500,000
3) Disease, Each Employee	$100,000

c. General Liability --

1) General Aggregate:	$2,000,000
2) Each Occurrence (Bodily Injury and Property Damage):	$1,000,000

d. Excess Umbrella Liability --

1) Each Occurrence:	$1,000,000
2) General Aggregate:	$1,000,000

e. Automobile Liability --Combined Single Limit (Bodily Injury and Property Damage):

Each Accident:
$1,000,000

f. Other (specify): $_____

B. *Additional Insureds:*

1. The following persons or entities are to be listed on Owner's general liability policies of insurance as additional insureds, and on any applicable property insurance policy as loss payees, as provided in Paragraph 6.04.B:

a. Lamp, Rynearson & Associates, Inc. **dba Larkin Lamp Rynearson**
Engineer

b. (Survey subconsultant to be named **to the City** prior to authorization by Engineer)
Engineer's Consultant

c. _____
Engineer's Consultant

2. During the term of this Agreement the Engineer shall notify Owner of any other Consultant to be listed as an additional insured on Owner's general liability and property policies of insurance.

3. The Owner shall be listed on Engineer's general liability policy as provided in Paragraph 6.04.A.

Copyright © 2008 National Society of Professional Engineers for EJCDC. All rights reserved.

This is **EXHIBIT H**, consisting of **1** pages, referred to in and part of the **Agreement between Owner and Engineer for Professional Services** dated_____, **2014** .

Dispute Resolution

Paragraph 6.08 of the Agreement is amended and supplemented to include the following agreement of the parties:

H6.08 *Dispute Resolution*

A. *Mediation*: Owner and Engineer agree that they shall first submit any and all unsettled claims, counterclaims, disputes, and other matters in question between them arising out of or relating to this Agreement or the breach thereof ("Disputes") to mediation by ~~*[insert name of mediator, or mediation service]*~~ **a mediator approved by both Engineer and Owner and experienced in resolving disputes arising for the performance of engineering services**. Owner and Engineer agree to participate in the mediation process in good faith. The process shall be conducted on a confidential basis, and shall be completed within 120 days. If such mediation is unsuccessful in resolving a Dispute, then (1) the parties may mutually agree to a dispute resolution of their choice, or (2) either party may seek to have the Dispute resolved by a court of competent jurisdiction.

Copyright © 2008 National Society of Professional Engineers for EJCDC. All rights reserved.

~~This is **EXHIBIT I**, consisting of _____ pages, referred to in and part of the **Agreement between Owner and Engineer for Professional Services** dated _____, _____.~~

~~**Limitations of Liability**~~

~~Paragraph 6.10 of the Agreement is supplemented to include the following agreement of the parties:~~

~~A. *Limitation of Engineer's Liability*~~

~~1. *Engineer's Liability Limited to the Amount of $*_____[A3]~~: ~~Notwithstanding any other provision of this Agreement, and to the fullest extent permitted by law, the total liability, in the aggregate, of Engineer and Engineer's officers, directors, members, partners, agents, employees, and Consultants, to Owner and anyone claiming by, through, or under Owner for any and all claims, losses, costs, or damages whatsoever arising out of, resulting from, or in any way related to the Project or the Agreement from any cause or causes, including but not limited to the negligence, professional errors or omissions, strict liability, breach of contract, indemnity obligations, or warranty express or implied of Engineer or Engineer's officers, directors, members, partners, agents, employees, or Consultants shall not exceed the total amount of $_____[A4].~~

Copyright © 2008 National Society of Professional Engineers for EJCDC. All rights reserved.

This is **EXHIBIT K**, consisting of _____ pages, referred to in and part of the **Agreement between Owner and Engineer for Professional Services** dated _____, _____.

AMENDMENT TO OWNER-ENGINEER AGREEMENT
Amendment No. _____

1. Background Data:

   a. Effective Date of Owner-Engineer Agreement: _____

   b. Owner: _____

   c. Engineer: Lamp, Rynearson & Associates, Inc. **dba Larkin Lamp Rynearson**

   d. Project: _____

~~2.~~**1.** Description of Modifications:

[NOTE TO USER: Include the following paragraphs that are appropriate and delete those not applicable to this amendment. Refer to paragraph numbers used in the Agreement or a previous amendment for clarity with respect to the modifications to be made. Use paragraph numbers in this document for ease of reference herein and in future correspondence or amendments.]

a. Engineer shall perform or furnish the following Additional Services:

b. The Scope of Services currently authorized to be performed by Engineer in accordance with the Agreement and previous amendments, if any, is modified as follows:

c. The responsibilities of Owner are modified as follows:

d. For the Additional Services or the modifications to services set forth above, Owner shall pay Engineer the following additional or modified compensation:

e. The schedule for rendering services is modified as follows:

f. Other portions of the Agreement (including previous amendments, if any) are modified as follows:

[List other Attachments, if any]

3. Agreement Summary (Reference only)

a.	Original Agreement amount:	$_____
b.	Net change for prior amendments:	$_____
c.	This amendment amount:	$_____
d.	Adjusted Agreement amount:	$_____

The foregoing Agreement Summary is for reference only and does not alter the terms of the Agreement, including those set forth in Exhibit C.

Copyright © 2008 National Society of Professional Engineers for EJCDC. All rights reserved.

Owner and Engineer hereby agree to modify the above-referenced Agreement as set forth in this Amendment. All provisions of the Agreement not modified by this or previous Amendments remain in effect. The Effective Date of this Amendment is _____.

OWNER:	ENGINEER:
City of Peculiar, Missouri	Lamp, Rynearson & Associates, Inc. **dba** **Larkin Lamp Rynearson**
_____	_____
By: _____	By: _____
Title: _____	Title: _____
Date Signed: _____	Date Signed: _____

Copyright © 2008 National Society of Professional Engineers for EJCDC. All rights reserved.

WATER RATES & KC CONNECTION

In FY 2016-17, the City could connect to KC water supply in an effort to save customers the additional cost of water charged to the City by no longer purchasing water from Cass PWSD #2. Kansas City has a 24-inch diameter transmission main that extends south of the intersection of Highway J and Hubach Hill Road to the Raymore elevated storage tank. To reach a connection point adjacent to the Raymore elevated tank would require approximately 5 miles of main to be installed north of the City along Route J with two possible end points as indicated in Figure 1.

We believe this connection to be in the best interest of the our customers as Figure 2 shows the differences in the rates. Although rates continue to increase, the rate is much lower with a direct connection with Kansas City than staying with Cass PWSD #2.

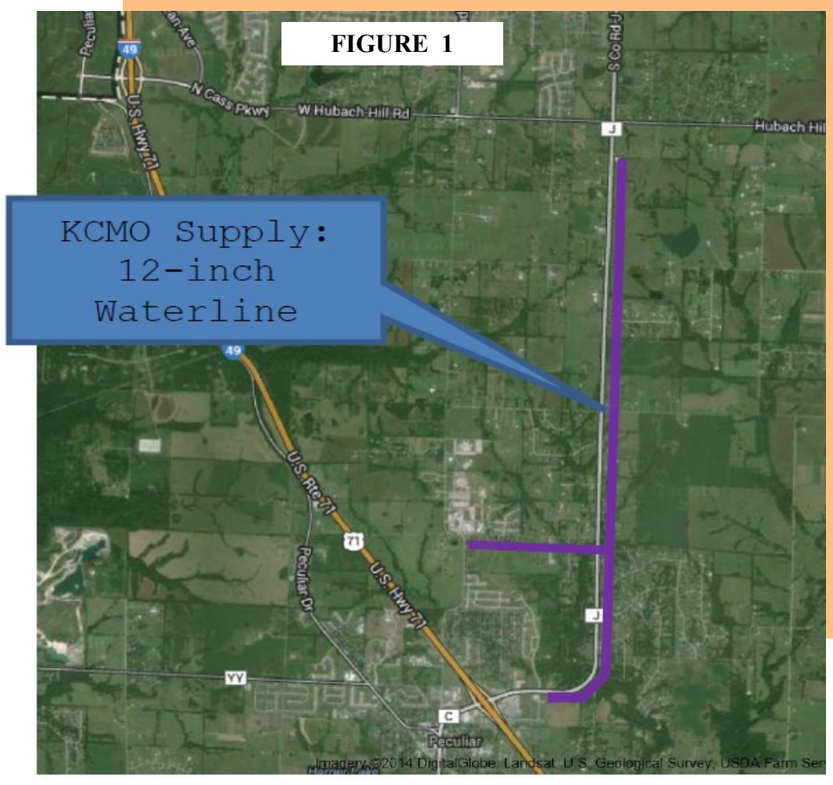

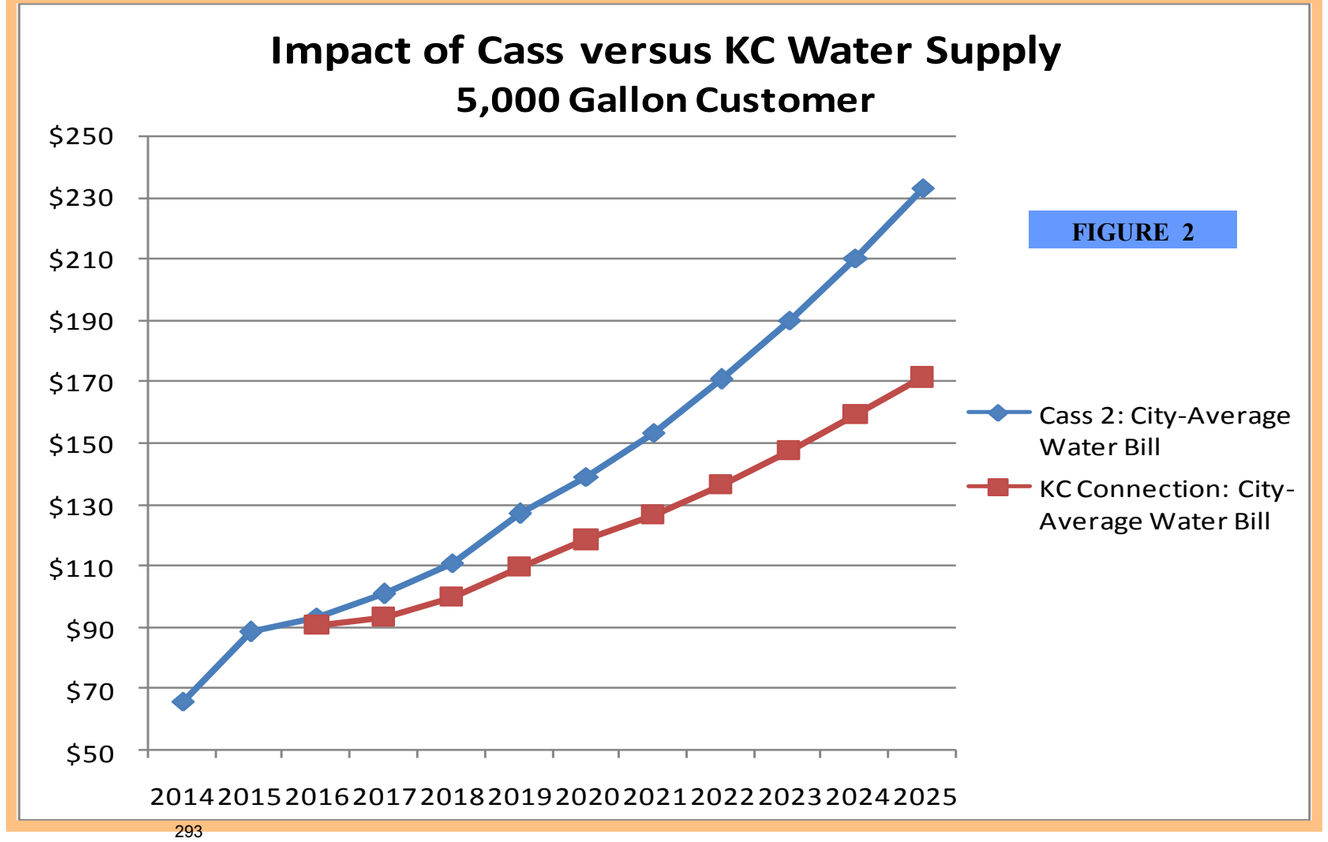

City of Peculiar, Missouri

Opinion of Probable Costs

Kansas City Supply Transmission Main and Master Meter

July, 2014

Item	Description	Quantities	Unit	Unit Price	Total
1	12" PVC, CL. 200	26,200	L.F.	$57.00	$1,493,400.00
2	Connections	4	EA	$5,000.00	$20,000.00
3	Valves	14	EA	$3,000.00	$42,000.00
4	Road Crossings	14	EA	$10,000.00	$140,000.00
5	Master Meter - KC approved type	1	EA	$90,000.00	$90,000.00
6	Air Release Valves	3	EA	$2,000.00	$6,000.00
7	Highway J Crossing	1	EA	$20,000.00	$20,000.00
8	Driveway Crossing	26	EA	$2,000.00	$52,000.00
9	Parking Lot Crossing	1	LS	$10,000.00	$10,000.00
10	Stream Crossing - (Directional Bore and Case)	190	L.F.	$500.00	$95,000.00
11	Flushing Hydrant	5	EA	$3,750.00	$18,750.00
12	SCADA Modifications	1	LS	$15,000.00	$15,000.00
13	Mobilization, Demobilization, Bonds, Traffic Control, Insurance	LS	LS	$90,000.00	$90,000.00
14	Construction Staking	LS	LS	$20,000.00	$20,000.00
15	Connection Fee	LS	LS	$820,000.00	$820,000.00
				Construction Cost	$2,932,150.00
				ROW & Contingency	$405,500.00
				Administration/Legal	$56,095.00
				Engineering - Planning & Design	$216,262.00
				Construction Observation	$21,645.00
				Survey	$140,237.00
				Cost of Issuance for SRF Funding	$113,172.00
				Total	$3,885,061.00

LARKIN
LAMP RYNEARSON

RESOLUTION 2014-40

A RESOLUTION OF THE BOARD OF ALDERMEN OF THE CITY OF PECULIAR, MISSOURI, APPROVING AND ACCEPTING THE AGREEMENT BETWEEN CITY OF PECULIAR AND LAMP, RYNEARSON & ASSOCIATES, INC DBA LARKIN LAMP RYNERSON FOR THE ENGINEERING DESIGN, ENGINEERING SURVEY, CONSTRUCTION ADMINISTRATION, AND PART-TIME CONSTRUCTION OBSERVATION OF THE KANSAS CITY WATER SUPPLY TRANSMISSION MAIN, MASTER METER AND APPURTENANCES.

WHEREAS, the Board of Aldermen previously approved the issuance of the 2013 Water Revenue Bonds for water main improvements, and

WHEREAS, the Board of Aldermen previously approved the FY 2013-2014 Budget indicating a direction and course of action for the future direct water transmission main connection to Kansas City, and

WHEREAS, the water main projects have been identified in the 2014 Engineering Report prepared by Larkin and approved by the Missouri Department of Natural Resources

NOW THEREFORE, be it ordained by the Board of Aldermen of the City of Peculiar, Missouri as follows:

Section 1. The approval of the agreement with the City of Peculiar and Larkin Lamp Rynearson in the amount not to exceed of $378,344.50.

Section 2. The Mayor is authorized to execute this resolution acknowledging the Larkin Lamp Rynearson Agreement.

Section 3. *Effective Date.* The effective date of this Resolution is the 21st day of July, 2014.

BE IT REMEMBERED THE PRECEDING RESOLUTION WAS ADOPTED ON READING THIS ___ DAY OF _____, 2014, BY THE FOLLOWING VOTE:

Alderman Fines	_____	**Alderman Ray**	_____
Alderman Ford	_____	**Alderman Roberts**	_____
Alderman McCrea	_____	**Alderman Turner**	_____

Approved: **Attest:**

_____ _____

Holly J. Stark, Mayor **Nick Jacobs, City Clerk**

City Administrator
Brad Ratliff

City Clerk
Nick Jacobs

City Engineer
Carl Brooks

Business Office
Trudy Prickett

Chief of Police
Harry Gurin

City Planner
Cliff McDonald

City Attorney
Reid Holbrook

Parks Director
Nathan Musteen

Municipal Offices – 250 S. Main Street, Peculiar, MO 64078
Phone: (816)779-5212 Facsimile: (816)779-1004

To: Mayor & Board of Aldermen
From: Carl Brooks, City Engineer (cbrooks@cityofpeculiar.com)
Date: July 18, 2014
Re: Resolution No. 2014-41, Mayor & Board of Alderman (BOA), acceptance of an agreement for the engineering improvements for design, survey, advertise, award, bid and construction phase services for the following projects:

1. 12-inch water main along Peculiar Dr. from North Street to Hurley. Also at the intersection of Main St. and E. North St replace existing 12-inch water mains as contract allows.
2. Install 8-inch water mains within the Spencer Addition along Clairmont Street, Soryl Avenue, and Hillcrest Drive. These will replace smaller diameter mains and relocate potable water mains further from existing sanitary sewer lines as required by MDNR.
3. Install an 8-inch water main along Harr Grove Rd. south of Elm St. to J Hwy Also replace the existing smaller diameter water mains that are prone to breaks as contract allows.

GENERAL INFORMATION

Applicant: City Staff
Requested Actions: Approval of engineering agreement to design, survey, advertise, award, bid and construction phase services.
Purpose: Acceptance of the request to start design of three (3) of the eleven (11) hydraulic priority improvement projects identified in the 2014 Engineering Report.
Property Location:

1. Peculiar Drive, between North Street and Hurley/Centennial Street. Also at the intersection of Main St. and E. North Rd.
2. Clairmont Street, Soryl Avenue, and Hillcrest Drive
3. Harr-Grove between Elm Street and Highway J

PROPOSAL

The acceptance for the design, survey, advertise, award, bid and construction phase services for the three hydraulic improvements in the 2014 Engineering Report including:

1. 12-inch water main along Peculiar Dr. from North Street to Hurley. Also at the intersection of Main St. and E. North St replace existing 12-inch water mains as contract allows.
2. Install 8-inch water mains within the Spencer Addition along Clairmont Street, Soryl Avenue, and Hillcrest Drive. These will replace smaller diameter mains and relocate potable water mains further from existing sanitary sewer lines as required by MDNR.
3. Install an 8-inch water main along Harr Grove Rd. south of Elm St. to J Hwy Also replace the existing smaller diameter water mains that are prone to breaks as contract allows.

The design, survey, advertise, award, bid and construction phase services for the three hydraulic improvements as listed in the 2014 Engineering Report is not to exceed 116,950.00.

PREVIOUS ACTIONS

The Mayor and BOA issued more than $1.0M in water revenue bonds in the fall of 2013.

The City has compiled a list of eleven (11) project improvements identified in the Engineering Report prepared by Larkin and approved by MDNR. These improvements have been identified and further explained in the report.

KEY ISSUES

The installation of the 12-inch water main along Peculiar Dr. from North Street to Hurley, as well as the replacement of the existing 12-inch water mains at the intersection of Main St. and E. North St have an estimated cost of $640,392.75 as indicated in the Engineering Report Appendix C; and are identified as the highest priority project to start design.

In addition the installation of the 8-inch water mains within the Spencer Addition along Clairmont Street, Soryl Avenue, and Hillcrest Drive are expected to cost approximately $369,940.50, as indicated in the Engineering Report Appendix C.

The third most important improvement in accordance with the recommendation by the 2014 Engineering Report is the install of an 8-inch water main along Harr Grove Road, south of Elm. to J Hwy. This project has a cost of approximately $292,059.00, as indicated in the Engineering Report Appendix C.

If the City's updated water hydraulic model, which is part of an engineering grant that the City received, indicates that the City's future growth and development needs are better served by the installation of these three projects, therefore City staff recommend the design of said improvements.

The design contract also includes the sidewalk along C Hwy from City Hall to C Hwy/I-49 interchange for the potential installation of the sidewalk in the fall 2014; as well as sidewalk improvements in McKernon Park.

City attorney has reviewed the engineering agreement. His comments were minor, and comments have been resolved with the engineer.

STAFF COMMENTS AND SUGGESTIONS

City staff agrees with the recommendations included in the Engineering Report, and recommends approval of the engineering agreement in an amount not to exceed $116,950.00. As you may recall, initially the amount of the engineering agreement was not to exceed $119,100.00. Due to continued negotiations between the engineer and City staff, the agreement has been reduced by $2,150.00.

STAFF RECOMMENDATION

City staff recommends the approval of the design, survey, advertise, award, bid and construction phase services for the three hydraulic improvements in the 2014 Engineering Report.

ATTACHMENTS

Larkin agreement for the CIP Water Mains Nos. 1, 2 & 3; and a sidewalk along C Hwy from City Hall to I-49 Interchange

Engineers Opinion of Probable Cost
Resolution 2014-xx

Engineers Joint Documents Committee
Design and Construction Related Documents
Instructions and License Agreement

Instructions

Before you use any EJCDC document:

1. Read the License Agreement. You agree to it and are bound by its terms when you use the EJCDC document.

2. Make sure that you have the correct version for your word processing software.

How to Use:

1. While EJCDC has expended considerable effort to make the software translations exact, it can be that a few document controls (e.g., bold, underline) did not carry over.

2. Similarly, your software may change the font specification if the font is not available in your system. It will choose a font that is close in appearance. In this event, the pagination may not match the control set.

3. If you modify the document, you must follow the instructions in the License Agreement about notification.

4. Also note the instruction in the License Agreement about the EJCDC copyright.

License Agreement

You should carefully read the following terms and conditions before using this document. Commencement of use of this document indicates your acceptance of these terms and conditions. If you do not agree to them, you should promptly return the materials to the vendor, and your money will be refunded.

The Engineers Joint Contract Documents Committee ("EJCDC") provides **EJCDC Design and Construction Related Documents** and licenses their use worldwide. You assume sole responsibility for the selection of specific documents or portions thereof to achieve your intended results, and for the installation, use, and results obtained from **EJCDC Design and Construction Related Documents**.

You acknowledge that you understand that the text of the contract documents of **EJCDC Design and Construction Related Documents** has important legal consequences and that consultation with an attorney is recommended with respect to use or modification of the text. You further acknowledge that EJCDC documents are protected by the copyright laws of the United States.

License:

You have a limited nonexclusive license to:

1. Use **EJCDC Design and Construction Related Documents** on any number of machines owned, leased or rented by your company or organization.

2. Use **EJCDC Design and Construction Related Documents** in printed form for bona fide contract documents.

3. Copy **EJCDC Design and Construction Related Documents** into any machine readable or printed form for backup or modification purposes in support of your use of **EJCDC Design and Construction Related Documents**.

You agree that you will:

1. Reproduce and include EJCDC's copyright notice on any printed or machine-readable copy, modification, or portion merged into another document or program. All proprietary rights in **EJCDC Design and Construction Related Documents** are and shall remain the property of EJCDC.

2. Not represent that any of the contract documents you generate from **EJCDC Design and Construction Related Documents** are EJCDC documents unless (i) the document text is used without alteration or (ii) all additions and changes to, and deletions from, the text are clearly shown.

You may not use, copy, modify, or transfer EJCDC Design and Construction Related Documents, or any copy, modification or merged portion, in whole or in part, except as expressly provided for in this license. Reproduction of EJCDC Design and Construction Related Documents in printed or machine-readable format for resale or educational purposes is expressly prohibited.

If you transfer possession of any copy, modification or merged portion of EJCDC Design and Construction Related Documents to another party, your license is automatically terminated.

Term:

The license is effective until terminated. You may terminate it at any time by destroying **EJCDC Design and Construction Related Documents** altogether with all copies, modifications and merged portions in any form. It will also terminate upon conditions set forth elsewhere in

this Agreement or if you fail to comply with any term or condition of this Agreement. You agree upon such termination to destroy **EJCDC Design and Construction Related Documents** along with all copies, modifications and merged portions in any form.

Limited Warranty:
EJCDC warrants the CDs and diskettes on which **EJCDC Design and Construction Related Documents** is furnished to be free from defects in materials and workmanship under normal use for a period of ninety (90) days from the date of delivery to you as evidenced by a copy of your receipt.

There is no other warranty of any kind, either expressed or implied, including, but not limited to the implied warranties of merchantability and fitness for a particular purpose. Some states do not allow the exclusion of implied warranties, so the above exclusion may not apply to you. This warranty gives you specific legal rights and you may also have other rights which vary from state to state.

EJCDC does not warrant that the functions contained in **EJCDC Design and Construction Related Documents** will meet your requirements or that the operation of **EJCDC Design and Construction Related Documents** will be uninterrupted or error free.

Limitations of Remedies:
EJCDC's entire liability and your exclusive remedy shall be:

1. the replacement of any document not meeting EJCDC's "Limited Warranty" which is returned to EJCDC's selling agent with a copy of your receipt, or

2. if EJCDC's selling agent is unable to deliver a replacement CD or diskette which is free of defects in materials and workmanship, you may terminate this Agreement by returning EJCDC Document and your money will be refunded.

In no event will EJCDC be liable to you for any damages, including any lost profits, lost savings or other incidental or consequential damages arising out of the use or inability to use **EJCDC Design and Construction Related Documents** even if EJCDC has been advised of the possibility of such damages, or for any claim by any other party.

Some states do not allow the limitation or exclusion of liability for incidental or consequential damages, so the above limitation or exclusion may not apply to you.

General:
You may not sublicense, assign, or transfer this license except as expressly provided in this Agreement. Any attempt otherwise to sublicense, assign, or transfer any of the rights, duties, or obligations hereunder is void.

This Agreement shall be governed by the laws of the State of Virginia. Should you have any questions concerning this Agreement, you may contact EJCDC by writing to:

Arthur Schwartz, Esq.
General Counsel
National Society of Professional Engineers
1420 King Street
Alexandria, VA 22314

Phone: (703) 684-2845
Fax: (703) 836-4875
e-mail: aschwartz@nspe.org

You acknowledge that you have read this agreement, understand it and agree to be bound by its terms and conditions. You further agree that it is the complete and exclusive statement of the agreement between us which supersedes any proposal or prior agreement, oral or written, and any other communications between us relating to the subject matter of this agreement.

This document has important legal consequences; consultation with an attorney is encouraged with respect to its use or modification. This document should be adapted to the particular circumstances of the contemplated Project and the Controlling Laws and Regulations.

AGREEMENT BETWEEN OWNER AND ENGINEER FOR PROFESSIONAL SERVICES

Prepared by

ENGINEERS JOINT CONTRACT DOCUMENTS COMMITTEE

and

Issued and Published Jointly by

AMERICAN COUNCIL OF ENGINEERING COMPANIES

ASSOCIATED GENERAL CONTRACTORS OF AMERICA

AMERICAN SOCIETY OF CIVIL ENGINEERS

PROFESSIONAL ENGINEERS IN PRIVATE PRACTICE
A Practice Division of the
NATIONAL SOCIETY OF PROFESSIONAL ENGINEERS

Copyright © 2008 National Society of Professional Engineers for EJCDC. All rights reserved.

This Agreement has been prepared for use with the Standard General Conditions of the Construction Contract (EJCDC C-700, 2007 Edition). Their provisions are interrelated, and a change in one may necessitate a change in the other. For guidance on the completion and use of this Agreement, see EJCDC User's Guide to the Owner-Engineer Agreement, EJCDC E-001, 2009 Edition.

Copyright © 2008 National Society of Professional Engineers
1420 King Street, Alexandria, VA 22314-2794
(703) 684-2882
www.nspe.org

American Council of Engineering Companies
1015 15th Street N.W., Washington, DC 20005
(202) 347-7474
www.acec.org

American Society of Civil Engineers
1801 Alexander Bell Drive, Reston, VA 20191-4400
(800) 548-2723
www.asce.org

Associated General Contractors of America
2300 Wilson Boulevard, Suite 400, Arlington, VA 22201-3308
(703) 548-3118
www.agc.org

The copyright for this EJCDC document is owned jointly by the four EJCDC sponsoring organizations and held in trust for their benefit by NSPE.

TABLE OF CONTENTS

Page

ARTICLE 1 – SERVICES OF ENGINEER 1
1.01 Scope 1

ARTICLE 2 – OWNER'S RESPONSIBILITIES 1
2.01 General 1

ARTICLE 3 – SCHEDULE FOR RENDERING SERVICES 2
3.01 Commencement 2
3.02 Time for Completion 2

ARTICLE 4 – INVOICES AND PAYMENTS 2
4.01 Invoices 2
4.02 Payments 2

ARTICLE 5 – OPINIONS OF COST 3
5.01 Opinions of Probable Construction Cost 3
5.02 Designing to Construction Cost Limit 3
5.03 Opinions of Total Project Costs 3

ARTICLE 6 – GENERAL CONSIDERATIONS 3
6.01 Standards of Performance 3
6.02 Design Without Construction Phase Services 5
6.03 Use of Documents 5
6.04 Insurance 6
6.05 Suspension and Termination 6
6.06 Controlling Law 8
6.07 Successors, Assigns, and Beneficiaries 8
6.08 Dispute Resolution 8
6.09 Environmental Condition of Site 8
6.10 Indemnification and Mutual Waiver 9
6.11 Miscellaneous Provisions 10

ARTICLE 7 – DEFINITIONS 10
7.01 Defined Terms 10

ARTICLE 8 – EXHIBITS AND SPECIAL PROVISIONS 13
8.01 Exhibits Included 13
8.02 Total Agreement 14
8.03 Designated Representatives 14
8.04 Engineer's Certifications 14

Copyright © 2008 National Society of Professional Engineers for EJCDC. All rights reserved.

AGREEMENT
BETWEEN OWNER AND ENGINEER
FOR
PROFESSIONAL SERVICES

THIS IS AN AGREEMENT effective as of _____ , **2014** ("Effective Date") between

City of Peculiar, Missouri ("Owner") and

Lamp, Rynearson and Associates, Inc., dba Larkin Lamp Rynearson ("Engineer").

Owner's Project, of which Engineer's services under this Agreement are a part, is generally identified as follows:

CIP Water Mains No. 1, 2, & 3 and Sidewalk on Route C from City Hall to Legend Lane and McKernan Park shelter sidewalk and sidewalk repairs. ("Project").

Engineer's services under this Agreement are generally identified as follows:

Engineering design, engineering survey, construction administration and milestone inspections.

Owner and Engineer further agree as follows:

ARTICLE 1 – SERVICES OF ENGINEER

1.01 *Scope*

A. Engineer shall provide, or cause to be provided, the services set forth herein and in Exhibit A.

ARTICLE 2 – OWNER'S RESPONSIBILITIES

2.01 *General*

A. Owner shall have the responsibilities set forth herein and in Exhibit B.

B. Owner shall pay Engineer as set forth in Exhibit C.

C. Owner shall be responsible for, and Engineer may rely upon, the accuracy and completeness of all requirements, programs, instructions, reports, data, and other information furnished by Owner to Engineer pursuant to this Agreement. Engineer may use such requirements, programs, instructions, reports, data, and information in performing or furnishing services under this Agreement.

Copyright © 2008 National Society of Professional Engineers for EJCDC. All rights reserved.

ARTICLE 3 – SCHEDULE FOR RENDERING SERVICES

3.01 *Commencement*

A. Engineer is authorized to begin rendering services as of the Effective Date.

3.02 *Time for Completion*

A. Engineer shall complete its obligations within a reasonable time. Specific periods of time for rendering services are set forth or specific dates by which services are to be completed are provided in Exhibit A, and are hereby agreed to be reasonable.

B. If, through no fault of Engineer, such periods of time or dates are changed, or the orderly and continuous progress of Engineer's services is impaired, or Engineer's services are delayed or suspended, then the time for completion of Engineer's services, and the rates and amounts of Engineer's compensation, shall be adjusted equitably.

C. If Owner authorizes changes in the scope, extent, or character of the Project, then the time for completion of Engineer's services, and the rates and amounts of Engineer's compensation, shall be adjusted equitably.

D. Owner shall make decisions and carry out its other responsibilities in a timely manner so as not to delay the Engineer's performance of its services.

E. If Engineer fails, through its own fault, to complete the performance required in this Agreement within the time set forth, as duly adjusted, then Owner shall be entitled, as its sole remedy, to the recovery of direct damages, if any, resulting from such failure.

ARTICLE 4 – INVOICES AND PAYMENTS

4.01 *Invoices*

A. *Preparation and Submittal of Invoices*: Engineer shall prepare invoices in accordance with its standard invoicing practices and the terms of Exhibit C. Engineer shall submit its invoices to Owner on a monthly basis. Invoices are due and **payable within 30 days of** receipt.

4.02 *Payments*

A. Application *to Interest and Principal*: Payment will be credited first to any interest owed to Engineer and then to principal.

B. *Failure to Pay*: If Owner fails to make any payment due Engineer for services and expenses within 3**0** days after receipt of Engineer's invoice, then:

1. amounts due Engineer will be increased at the rate of 1.0% per month (or the maximum rate of interest permitted by law, if less) **computed** from thirtieth day **after the date of Engineer's invoice**; and

2. Engineer may, after giving seven days written notice to Owner, suspend services under this Agreement until Owner has paid in full all amounts due for services, expenses, and other related charges. Owner waives any and all claims against Engineer for any such suspension.

C. *Disputed Invoices:* If Owner contests an invoice, Owner shall promptly advise Engineer of the specific basis for doing so, may withhold only that portion so contested, and must pay the undisputed portion.

Copyright © 2008 National Society of Professional Engineers for EJCDC. All rights reserved.

D. *Legislative Actions:* If after the Effective Date any governmental entity takes a legislative action that imposes taxes, fees, or charges on Engineer's services or compensation under this Agreement, then the Engineer may invoice such new taxes, fees, or charges as a Reimbursable Expense to which a factor of 1.0 shall be applied. Owner shall reimburse Engineer for the cost of such invoiced new taxes, fees, and charges; such reimbursement shall be in addition to the compensation to which Engineer is entitled under the terms of Exhibit C.

ARTICLE 5 – OPINIONS OF COST

5.01 *Opinions of Probable Construction Cost*

A. Engineer's opinions of probable Construction Cost are to be made on the basis of Engineer's experience and qualifications and represent Engineer's best judgment as an experienced and qualified professional generally familiar with the construction industry. However, because Engineer has no control over the cost of labor, materials, equipment, or services furnished by others, or over contractors' methods of determining prices, or over competitive bidding or market conditions, Engineer cannot and does not guarantee that proposals, bids, or actual Construction Cost will not vary from opinions of probable Construction Cost prepared by Engineer. If Owner requires greater assurance as to probable Construction Cost, Owner must employ an independent cost estimator as provided in Exhibit B.

5.02 *Designing to Construction Cost Limit*

A. If a Construction Cost limit is established between Owner and Engineer, such Construction Cost limit and a statement of Engineer's rights and responsibilities with respect thereto will be specifically set forth in Exhibit F, "Construction Cost Limit," to this Agreement.

5.03 *Opinions of Total Project Costs*

A. The services, if any, of Engineer with respect to Total Project Costs shall be limited to assisting the Owner in collating the various cost categories which comprise Total Project Costs. Engineer assumes no responsibility for the accuracy of any opinions of Total Project Costs.

ARTICLE 6 – GENERAL CONSIDERATIONS

6.01 *Standards of Performance*

A. *Standard of Care:* The standard of care for all professional engineering and related services performed or furnished by Engineer under this Agreement will be the care and skill ordinarily used by members of the subject profession practicing under similar circumstances at the same time and in the same locality. ~~Engineer makes no warranties, express or implied, under this Agreement or otherwise, in connection with Engineer's services.~~

B. *Technical Accuracy:* Owner shall not be responsible for discovering deficiencies in the technical accuracy of Engineer's services. Engineer shall correct deficiencies in technical accuracy without additional compensation, unless such corrective action is directly attributable to deficiencies in Owner-furnished information.

C. *Consultants:* Engineer may employ such Consultants as Engineer deems necessary to assist in the performance or furnishing of the services, subject to reasonable, timely, and substantive objections by Owner.

D. *Reliance on Others:* Subject to the standard of care set forth in Paragraph 6.01.A, Engineer and its Consultants may use or rely upon design elements and information ordinarily or customarily furnished by

Copyright © 2008 National Society of Professional Engineers for EJCDC. All rights reserved.

others, including, but not limited to, specialty contractors, manufacturers, suppliers, and the publishers of technical standards.

E. Compliance with Laws and Regulations, and Policies and Procedures:

1. Engineer and Owner shall comply with applicable Laws and regulations.

2. Prior to the Effective Date, Owner provided to Engineer in writing any and all policies and procedures of Owner applicable to Engineer's performance of services under this Agreement provided to Engineer in writing. Engineer shall comply with such policies and procedures, subject to the standard of care set forth in Paragraph 6.01.A, and to the extent compliance is not inconsistent with professional practice requirements.

3. This Agreement is based on Laws and Regulations and Owner-provided written policies and procedures as of the Effective Date. Changes after the Effective Date to these Laws and Regulations, or to Owner-provided written policies and procedures, may be the basis for modifications to Owner's responsibilities or to Engineer's scope of services, times of performance, or compensation.

F. Engineer shall not be required to sign any documents, no matter by whom requested, that would result in the Engineer having to certify, guarantee, or warrant the existence of conditions whose existence the Engineer cannot ascertain. Owner agrees not to make resolution of any dispute with the Engineer or payment of any amount due to the Engineer in any way contingent upon the Engineer signing any such documents.

G. The general conditions for any construction contract documents prepared hereunder are to be the "Standard General Conditions of the Construction Contract" as prepared by the Engineers Joint Contract Documents Committee (EJCDC C-700, 2007 Edition)**, with revisions by the Engineer,** unless both parties mutually agree to use other general conditions by specific reference in Exhibit J. **Copies of the Engineer revised document are available for review.**

H. Engineer shall not at any time supervise, direct, control, or have authority over any contractor work, nor shall Engineer have authority over or be responsible for the means, methods, techniques, sequences, or procedures of construction selected or used by any contractor, or the safety precautions and programs incident thereto, for security or safety at the Site, nor for any failure of a contractor to comply with Laws and Regulations applicable to such contractor's furnishing and performing of its work.

I. Engineer neither guarantees the performance of any Contractor nor assumes responsibility for any Contractor's failure to furnish and perform the Work in accordance with the Contract Documents.

J. Engineer shall not provide or have any responsibility for surety bonding or insurance-related advice, recommendations, counseling, or research, or enforcement of construction insurance or surety bonding requirements.

K. Engineer shall not be responsible for the acts or omissions of any Contractor, Subcontractor, or Supplier, or of any of their agents or employees or of any other persons (except Engineer's own agents, employees, and Consultants) at the Site or otherwise furnishing or performing any Work; or for any decision made regarding the Contract Documents, or any application, interpretation, or clarification, of the Contract Documents, other than those made by Engineer.

L. While at the Site, Engineer's employees and representatives shall comply with the specific applicable requirements of Contractor's and Owner's safety programs of which Engineer has been informed in writing.

Copyright © 2008 National Society of Professional Engineers for EJCDC. All rights reserved.

6.02 *Design Without Construction Phase Services*

A. Engineer shall be responsible only for those Construction Phase services expressly required of Engineer in Exhibit A~~, Paragraph A1.05~~. With the exception of such expressly required services, Engineer shall have no design, Shop Drawing review, or other obligations during construction and Owner assumes all responsibility for the application and interpretation of the Contract Documents, review and response to Contractor claims, contract administration, processing Change Orders, revisions to the Contract Documents during construction, construction surety bonding and insurance requirements, construction observation and review, review of payment applications, and all other necessary Construction Phase engineering and professional services. Owner waives all claims against the Engineer that may be connected in any way to Construction Phase engineering or professional services except for those services that are expressly required of Engineer in Exhibit A~~, Paragraph A1.05~~.

6.03 *Use of Documents*

A. All Documents are **Engineer's** instruments of service in respect to this Project~~, and Engineer shall retain an ownership and property interest therein (including the copyright and the right of reuse at the discretion of the Engineer) whether or not the Project is completed~~. Owner shall not rely in any way on any Document unless it is in printed form, signed or sealed by the Engineer or one of its Consultants.

B. Either party to this Agreement may rely that data or information set forth on paper (also known as hard copies) that the party receives from the other party by mail, hand delivery, or facsimile, are the items that the other party intended to send. Files in electronic media format of text, data, graphics, or other types that are furnished by one party to the other are furnished only for convenience, not reliance by the receiving party. Any conclusion or information obtained or derived from such electronic files will be at the user's sole risk. If there is a discrepancy between the electronic files and the hard copies, the hard copies govern. If the parties agree to other electronic transmittal procedures, such are set forth in Exhibit J.

C. Because data stored in electronic media format can deteriorate or be modified inadvertently or otherwise without authorization of the data's creator, the party receiving electronic files agrees that it will perform acceptance tests or procedures within 60 days, after which the receiving party shall be deemed to have accepted the data thus transferred. Any transmittal errors detected within the 60-day acceptance period will be corrected by the party delivering the electronic files.

D. When transferring documents in electronic media format, the transferring party makes no representations as to long-term compatibility, usability, or readability of such documents resulting from the use of software application packages, operating systems, or computer hardware differing from those used by the documents' creator.

E. Owner~~ may make and retain copies of Documents for information and reference in connection with use on the Project by Owner. Engineer grants Owner a limited license to use the Documents on the Project, extensions of the Project, and for related uses of the Owner,~~ **shall receive ownership of the final construction documents prepared under this Agreement,** subject to receipt by Engineer of full payment for all services relating to preparation of the Documents and subject to the following limitations: (1) Owner acknowledges that such Documents are not intended or represented to be suitable for use on the Project unless completed by Engineer, or for use or reuse by Owner or others on extensions of the Project, on any other project, or for any other use or purpose, without written verification or adaptation by Engineer; (2) any such use or reuse, or any modification of the Documents, without written verification, completion, or adaptation by Engineer, as appropriate for the specific purpose intended, will be at Owner's sole risk and without liability or legal exposure to Engineer or to its officers, directors, members, partners, agents, employees, and Consultants; (3) Owner shall indemnify and hold harmless Engineer and its officers, directors, members, partners, agents, employees, and Consultants from all claims, damages, losses, and expenses, including attorneys' fees, arising out of or resulting from any use, reuse, or

Copyright © 2008 National Society of Professional Engineers for EJCDC. All rights reserved.

modification of the Documents without written verification, completion, or adaptation by Engineer; and (4) such limited license to Owner shall not create any rights in third parties.

F. If Engineer at Owner's request verifies the suitability of the Documents, completes them, or adapts them for extensions of the Project or for any other purpose, then Owner shall compensate Engineer at rates or in an amount to be agreed upon by Owner and Engineer.

6.04 *Insurance*

A. Engineer shall procure and maintain insurance as set forth in Exhibit G, "Insurance." Engineer shall cause Owner to be listed as an additional insured on any applicable general liability insurance policy carried by Engineer.

B. Owner shall procure and maintain insurance as set forth in Exhibit G, "Insurance." Owner shall cause Engineer and its Consultants to be listed as additional insureds on any general liability policies and as loss payees on any property insurance policies carried by Owner which are applicable to the Project.

C. Owner shall require Contractor to purchase and maintain policies of insurance covering workers' compensation, general liability, property damage (other than to the Work itself), motor vehicle damage and injuries, and other insurance necessary to protect Owner's and Engineer's interests in the Project**, as per the requirements of paragraphs 5.04, 5.05 and 5.06 of the "Standard General Conditions of the Construction Contract" as prepared by the Engineers Joint Contract Documents Committee (EJCDC C-700, 2007 Edition, and the Supplementary Conditions prepared by the Engineer**. Owner shall require Contractor to cause Engineer and its Consultants to be listed as additional insureds with respect to such liability and other insurance purchased and maintained by Contractor for the Project.

D. Owner and Engineer shall each deliver to the other certificates of insurance evidencing the coverages indicated in Exhibit G. Such certificates shall be furnished prior to commencement of Engineer's services and at renewals thereafter during the life of the Agreement.

E. All policies of property insurance relating to the Project shall contain provisions to the effect that Engineer's and its Consultants' interests are covered and that in the event of payment of any loss or damage the insurers will have no rights of recovery against Engineer or its Consultants, or any insureds, additional insureds, or loss payees thereunder.

F. All policies of insurance shall contain a provision or endorsement that the coverage afforded will not be canceled or reduced in limits by endorsement, and **that renewal** will not be refused, until at least 30 days prior written notice has been given to Owner and Engineer and to each other additional insured (if any) to which a certificate of insurance has been issued.

G. At any time, Owner may request that Engineer or its Consultants, at Owner's sole expense, provide additional insurance coverage, increased limits, or revised deductibles that are more protective than those specified in Exhibit G. If so requested by Owner, and if commercially available, Engineer shall obtain and shall require its Consultants to obtain such additional insurance coverage, different limits, or revised deductibles for such periods of time as requested by Owner, and Exhibit G will be supplemented to incorporate these requirements.

6.05 *Suspension and Termination*

A. Suspension:

1. By Owner: Owner may suspend the Project for up to 90 days upon seven days written notice to Engineer.

Copyright © 2008 National Society of Professional Engineers for EJCDC. All rights reserved.

2. By Engineer: Engineer may, after giving seven days written notice to Owner, suspend services under this Agreement if Engineer's performance has been substantially delayed through no fault of Engineer.

B. *Termination*: The obligation to provide further services under this Agreement may be terminated:

1. For cause,

a. By either party upon ~~30~~ **7** days written notice in the event of substantial failure by the other party to perform in accordance with the terms hereof through no fault of the terminating party.

b. By Engineer:

1) upon seven days written notice if Owner demands that Engineer furnish or perform services contrary to Engineer's responsibilities as a licensed professional; or

2) upon seven days written notice if the Engineer's services for the Project are delayed or suspended for more than 90 days for reasons beyond Engineer's control.

3) Engineer shall have no liability to Owner on account of such termination.

c. Notwithstanding the foregoing, this Agreement will not terminate under Paragraph 6.05.B.1.a if the party receiving such notice begins, within seven days of receipt of such notice, to correct its substantial failure to perform and proceeds diligently to cure such failure within no more than 30 days of receipt thereof; provided, however, that if and to the extent such substantial failure cannot be reasonably cured within such 30 day period, and if such party has diligently attempted to cure the same and thereafter continues diligently to cure the same, then the cure period provided for herein shall extend up to, but in no case more than, 60 days after the date of receipt of the notice.

2. For convenience,

a. By Owner effective **7 days** upon Engineer's receipt of notice from Owner.

C. *Effective Date of Termination*: The terminating party under Paragraph 6.05.B may set the effective date of termination at a time up to 30 days later than otherwise provided to allow Engineer to demobilize personnel and equipment from the Site, to complete tasks whose value would otherwise be lost, to prepare notes as to the status of completed and uncompleted tasks, and to assemble Project materials in orderly files.

D. Payments Upon Termination:

1. In the event of any termination under Paragraph 6.05, Engineer will be entitled to invoice Owner and to receive full payment for all services performed or furnished in accordance with this Agreement and all Reimbursable Expenses incurred through the effective date of termination. Upon making such payment, Owner shall have the limited right to the use of Documents, at Owner's sole risk, subject to the provisions of Paragraph 6.03.E.

2. In the event of termination by Owner for convenience or by Engineer for cause, Engineer shall be entitled, in addition to invoicing for those items identified in Paragraph 6.05.D.1, to invoice Owner and to payment of a reasonable amount for services and expenses directly attributable to termination, both before and after the effective date of termination, such as reassignment of

Copyright © 2008 National Society of Professional Engineers for EJCDC. All rights reserved.

personnel, costs of terminating contracts with Engineer's Consultants, and other related close-out costs, using methods and rates for Additional Services as set forth in Exhibit C.

6.06 *Controlling Law*

A. This Agreement is to be governed by the law of the state or jurisdiction in which the Project is located.

6.07 *Successors, Assigns, and Beneficiaries*

A. Owner and Engineer are hereby bound and the successors, executors, administrators, and legal representatives of Owner and Engineer (and to the extent permitted by Paragraph 6.07.B the assigns of Owner and Engineer) are hereby bound to the other party to this Agreement and to the successors, executors, administrators and legal representatives (and said assigns) of such other party, in respect of all covenants, agreements, and obligations of this Agreement.

B. Neither Owner nor Engineer may assign, sublet, or transfer any rights under or interest (including, but without limitation, moneys that are due or may become due) in this Agreement without the written consent of the other, except to the extent that any assignment, subletting, or transfer is mandated or restricted by law. Unless specifically stated to the contrary in any written consent to an assignment, no assignment will release or discharge the assignor from any duty or responsibility under this Agreement.

C. Unless expressly provided otherwise in this Agreement:

1. Nothing in this Agreement shall be construed to create, impose, or give rise to any duty owed by Owner or Engineer to any Contractor, Subcontractor, Supplier, other individual or entity, or to any surety for or employee of any of them.

2. All duties and responsibilities undertaken pursuant to this Agreement will be for the sole and exclusive benefit of Owner and Engineer and not for the benefit of any other party.

3. Owner agrees that the substance of the provisions of this Paragraph 6.07.C shall appear in the Contract Documents.

6.08 *Dispute Resolution*

A. Owner and Engineer agree to negotiate all disputes between them in good faith for a period of 30 days from the date of notice prior to invoking the procedures of Exhibit H or other provisions of this Agreement, or exercising their rights under law.

B. If the parties fail to resolve a dispute through negotiation under Paragraph 6.08.A, then either or both may invoke the procedures of Exhibit H. If Exhibit H is not included, or if no dispute resolution method is specified in Exhibit H, then the parties may exercise their rights under law.

6.09 *Environmental Condition of Site*

A. Owner has disclosed to Engineer in writing the existence of all known and suspected Asbestos, PCBs, Petroleum, Hazardous Waste, Radioactive Material, hazardous substances, and other Constituents of Concern located at or near the Site, including type, quantity, and location.

B. Owner represents to Engineer that to the best of its knowledge no Constituents of Concern, other than those disclosed in writing to Engineer, exist at the Site.

Copyright © 2008 National Society of Professional Engineers for EJCDC. All rights reserved.

C. If Engineer encounters or learns of an undisclosed Constituent of Concern at the Site, then Engineer shall notify (1) Owner and (2) appropriate governmental officials if Engineer reasonably concludes that doing so is required by applicable Laws or Regulations.

D. It is acknowledged by both parties that Engineer's scope of services does not include any services related to Constituents of Concern. If Engineer or any other party encounters an undisclosed Constituent of Concern, or if investigative or remedial action, or other professional services, are necessary with respect to disclosed or undisclosed Constituents of Concern, then Engineer may, at its option and without liability for consequential or any other damages, suspend performance of services on the portion of the Project affected thereby until Owner: (1) retains appropriate specialist consultants or contractors to identify and, as appropriate, abate, remediate, or remove the Constituents of Concern; and (2) warrants that the Site is in full compliance with applicable Laws and Regulations.

E. If the presence at the Site of undisclosed Constituents of Concern adversely affects the performance of Engineer's services under this Agreement, then the Engineer shall have the option of (1) accepting an equitable adjustment in its compensation or in the time of completion, or both; or (2) terminating this Agreement for cause on 30 days notice.

F. Owner acknowledges that Engineer is performing professional services for Owner and that Engineer is not and shall not be required to become an "owner" "arranger," "operator," "generator," or "transporter" of hazardous substances, as defined in the Comprehensive Environmental Response, Compensation, and Liability Act (CERCLA), as amended, which are or may be encountered at or near the Site in connection with Engineer's activities under this Agreement.

6.10 *Indemnification and Mutual Waiver*

A. *Indemnification by Engineer*: To the fullest extent permitted by law, Engineer shall indemnify and hold harmless Owner, and Owner's officers, directors, members, partners, agents, consultants, and employees from reasonable claims, costs, losses, and damages arising out of or relating to the Project, provided that any such claim, cost, loss, or damage is attributable to bodily injury, sickness, disease, or death, or to injury to or destruction of tangible property (other than the Work itself), including the loss of use resulting therefrom, but only to the extent caused by any negligent act or omission of Engineer or Engineer's officers, directors, members, partners, agents, employees, or Consultants. ~~**This indemnification provision is subject to and limited by the provisions, if any, agreed to by Owner and Engineer in Exhibit I, "Limitations of Liability."**~~

B. Indemnification by Owner: Owner shall indemnify and hold harmless Engineer and its officers, directors, members, partners, agents, employees, and Consultants as required by Laws and Regulations**.** ~~and to the extent (if any) required in Exhibit I, Limitations of Liability.~~

C. Environmental Indemnification: To the fullest extent permitted by law, Owner shall indemnify and hold harmless Engineer and its officers, directors, members, partners, agents, employees, and Consultants from and against any and all claims, costs, losses, and damages (including but not limited to all fees and charges of engineers, architects, attorneys and other professionals, and all court, arbitration, or other dispute resolution costs) caused by, arising out of, relating to, or resulting from a Constituent of Concern at, on, or under the Site, provided that (1) any such claim, cost, loss, or damage is attributable to bodily injury, sickness, disease, or death, or to injury to or destruction of tangible property (other than the Work itself), including the loss of use resulting therefrom, and (2) nothing in this paragraph shall obligate Owner to indemnify any individual or entity from and against the consequences of that individual's or entity's own negligence or willful misconduct.

D. Percentage Share of Negligence: To the fullest extent permitted by law, a party's total liability to the other party and anyone claiming by, through, or under the other party for any cost, loss, or damages caused

Copyright © 2008 National Society of Professional Engineers for EJCDC. All rights reserved.

in part by the negligence of the party and in part by the negligence of the other party or any other negligent entity or individual, shall not exceed the percentage share that the party's negligence bears to the total negligence of Owner, Engineer, and all other negligent entities and individuals.

E. Mutual Waiver: To the fullest extent permitted by law, Owner and Engineer waive against each other, and the other's employees, officers, directors, members, agents, insurers, partners, and consultants, any and all claims for or entitlement to special, incidental, indirect, or consequential damages arising out of, resulting from, or in any way related to the Project.

6.11 *Miscellaneous Provisions*

A. *Notices*: Any notice required under this Agreement will be in writing, addressed to the appropriate party at its address on the signature page and given personally, by facsimile, by registered or certified mail postage prepaid, or by a commercial courier service. All notices shall be effective upon the date of receipt.

B. *Survival*: All express representations, waivers, indemnifications, and limitations of liability included in this Agreement will survive its completion or termination for any reason.

C. *Severability*: Any provision or part of the Agreement held to be void or unenforceable under any Laws or Regulations shall be deemed stricken, and all remaining provisions shall continue to be valid and binding upon Owner and Engineer, which agree that the Agreement shall be reformed to replace such stricken provision or part thereof with a valid and enforceable provision that comes as close as possible to expressing the intention of the stricken provision.

D. *Waiver*: A party's non-enforcement of any provision shall not constitute a waiver of that provision, nor shall it affect the enforceability of that provision or of the remainder of this Agreement.

E. *Accrual of Claims*: To the fullest extent permitted by law, all causes of action arising under this Agreement shall be deemed to have accrued, and all statutory periods of limitation shall commence, no later than the date of Substantial Completion.

ARTICLE 7 – DEFINITIONS

7.01 *Defined Terms*

A. Wherever used in this Agreement (including the Exhibits hereto) terms (including the singular and plural forms) printed with initial capital letters have the meanings indicated in the text above, in the exhibits, or in the following provisions:

1. *Additional Services* – The services to be performed for or furnished to Owner by Engineer in accordance with ~~Part 2 of~~ Exhibit A of this Agreement.

2. *Agreement* – This written contract for professional services between Owner and Engineer, including all exhibits identified in Paragraph 8.01 and any duly executed amendments.

3. *Asbestos* – Any material that contains more than one percent asbestos and is friable or is releasing asbestos fibers into the air above current action levels established by the United States Occupational Safety and Health Administration.

4. *Basic Services* – The services to be performed for or furnished to Owner by Engineer in accordance with ~~Part 1 of~~ Exhibit A of this Agreement.

Copyright © 2008 National Society of Professional Engineers for EJCDC. All rights reserved.

5. *Construction Contract* – The entire and integrated written agreement between Owner and Contractor concerning the Work.

6. *Construction Cost* – The cost to Owner of those portions of the entire Project designed or specified by Engineer. Construction Cost does not include costs of services of Engineer or other design professionals and consultants; cost of land or rights-of-way, or compensation for damages to properties; Owner's costs for legal, accounting, insurance counseling or auditing services; interest or financing charges incurred in connection with the Project; or the cost of other services to be provided by others to Owner pursuant to Exhibit B of this Agreement. Construction Cost is one of the items comprising Total Project Costs.

7. *Constituent of Concern* – Any substance, product, waste, or other material of any nature whatsoever (including, but not limited to, Asbestos, Petroleum, Radioactive Material, and PCBs) which is or becomes listed, regulated, or addressed pursuant to (a) the Comprehensive Environmental Response, Compensation and Liability Act, 42 U.S.C. §§9601 et seq. ("CERCLA"); (b) the Hazardous Materials Transportation Act, 49 U.S.C. §§1801 et seq.; (c) the Resource Conservation and Recovery Act, 42 U.S.C. §§6901 et seq. ("RCRA"); (d) the Toxic Substances Control Act, 15 U.S.C. §§2601 et seq.; (e) the Clean Water Act, 33 U.S.C. §§1251 et seq.; (f) the Clean Air Act, 42 U.S.C. §§7401 et seq.; and (g) any other federal, state, or local statute, law, rule, regulation, ordinance, resolution, code, order, or decree regulating, relating to, or imposing liability or standards of conduct concerning, any hazardous, toxic, or dangerous waste, substance, or material.

8. *Consultants* – Individuals or entities having a contract with Engineer to furnish services with respect to this Project as Engineer's independent professional associates and consultants; subcontractors; or vendors.

9. *Contract Documents* – Those items so designated in the Construction Contract, including the Drawings, Specifications, construction agreement, and general and supplementary conditions. Only printed or hard copies of the items listed in the Construction Contract are Contract Documents. ~~Approved~~**Reviewed** Shop Drawings, other Contractor submittals, and the reports and drawings of subsurface and physical conditions are not Contract Documents.

10. *Contractor* – The entity or individual with which Owner has entered into a Construction Contract.

11. *Documents* – Data, reports, Drawings, Specifications, Record Drawings, and other deliverables, whether in printed or electronic media format, provided or furnished in appropriate phases by Engineer to Owner pursuant to this Agreement.

12. *Drawings* – That part of the Contract Documents prepared or approved by Engineer which graphically shows the scope, extent, and character of the Work to be performed by Contractor. Shop Drawings are not Drawings as so defined.

13. *Effective Date* – The date indicated in this Agreement on which it becomes effective, but if no such date is indicated, the date on which this Agreement is signed and delivered by the last of the parties to sign and deliver.

14. *Engineer* – The individual or entity named as such in this Agreement.

15. *Hazardous Waste* – The term Hazardous Waste shall have the meaning provided in Section 1004 of the Solid Waste Disposal Act (42 USC Section 6903) as amended from time to time.

Copyright © 2008 National Society of Professional Engineers for EJCDC. All rights reserved.

16. *Laws and Regulations; Laws or Regulations* – Any and all applicable laws, rules, regulations, ordinances, codes, and orders of any and all governmental bodies, agencies, authorities, and courts having jurisdiction.

17. *Owner* – The individual or entity with which Engineer has entered into this Agreement and for which the Engineer's services are to be performed. Unless indicated otherwise, this is the same individual or entity that will enter into any Construction Contracts concerning the Project.

18. *PCBs* – Polychlorinated biphenyls.

19. *Petroleum* – Petroleum, including crude oil or any fraction thereof which is liquid at standard conditions of temperature and pressure (60 degrees Fahrenheit and 14.7 pounds per square inch absolute), such as oil, petroleum, fuel oil, oil sludge, oil refuse, gasoline, kerosene, and oil mixed with other non-hazardous waste and crude oils.

20. *Project* – The total construction of which the Work to be performed under the Contract Documents may be the whole, or a part.

21. *Radioactive Material* – Source, special nuclear, or byproduct material as defined by the Atomic Energy Act of 1954 (42 USC Section 2011 et seq.) as amended from time to time.

22. *Record Drawings* – Drawings depicting the completed Project, prepared by Engineer as an Additional Service and based solely on Contractor's record copy of all Drawings, Specifications, addenda, change orders, work change directives, field orders, and written interpretations and clarifications, as delivered to Engineer and annotated by Contractor to show changes made during construction.

23. *Reimbursable Expenses* – The expenses incurred directly by Engineer in connection with the performing or furnishing of Basic and Additional Services for the Project.

24. *Resident Project Representative* – The authorized representative of Engineer assigned to assist Engineer at the Site during the Construction Phase. As used herein, the term Resident Project Representative or "RPR" includes any assistants or field staff of Resident Project Representative agreed to by Owner. The duties and responsibilities of the Resident Project Representative, if any, are as set forth in Exhibit D.

25. *Samples* – Physical examples of materials, equipment, or workmanship that are representative of some portion of the Work and which establish the standards by which such portion of the Work will be judged.

26. *Shop Drawings* – All drawings, diagrams, illustrations, schedules, and other data or information which are specifically prepared or assembled by or for Contractor and submitted by Contractor to illustrate some portion of the Work.

27. *Site* – Lands or areas to be indicated in the Contract Documents as being furnished by Owner upon which the Work is to be performed, including rights-of-way and easements for access thereto, and such other lands furnished by Owner which are designated for the use of Contractor.

28. *Specifications* – That part of the Contract Documents consisting of written technical descriptions of materials, equipment, systems, standards, and workmanship as applied to the Work and certain administrative details applicable thereto.

Copyright © 2008 National Society of Professional Engineers for EJCDC. All rights reserved.

29. *Subcontractor* – An individual or entity having a direct contract with Contractor or with any other Subcontractor for the performance of a part of the Work at the Site.

30. *Substantial Completion* – The time at which the Work (or a specified part thereof) has progressed to the point where, in the opinion of Engineer, the Work (or a specified part thereof) is sufficiently complete, in accordance with the Contract Documents, so that the Work (or a specified part thereof) can be utilized for the purposes for which it is intended. The terms "substantially complete" and "substantially completed" as applied to all or part of the Work refer to Substantial Completion thereof.

31. *Supplier* – A manufacturer, fabricator, supplier, distributor, materialman, or vendor having a direct contract with Contractor or with any Subcontractor to furnish materials or equipment to be incorporated in the Work by Contractor or Subcontractor.

32. *Total Project Costs* – The sum of the Construction Cost, allowances for contingencies, and the total costs of services of Engineer or other design professionals and consultants, together with such other Project-related costs that Owner furnishes for inclusion, including but not limited to cost of land, rights-of-way, compensation for damages to properties, Owner's costs for legal, accounting, insurance counseling and auditing services, interest and financing charges incurred in connection with the Project, and the cost of other services to be provided by others to Owner pursuant to Exhibit B of this Agreement.

33. *Work* – The entire construction or the various separately identifiable parts thereof required to be provided under the Contract Documents. Work includes and is the result of performing or providing all labor, services, and documentation necessary to produce such construction, and furnishing, installing, and incorporating all materials and equipment into such construction, all as required by the Contract Documents.

ARTICLE 8 – EXHIBITS AND SPECIAL PROVISIONS

8.01 *Exhibits Included:*

A. Exhibit A, Engineer's Services.

B. Exhibit B, Owner's Responsibilities.

C. Exhibit C, Payments to Engineer for Services and Reimbursable Expenses.

D. Exhibit D, Duties, Responsibilities and Limitations of Authority of Resident Project Representative. **NOT INCLUDED**

E. Exhibit E, Notice of Acceptability of Work. **NOT INCLUDED**

F. Exhibit F, Construction Cost Limit. **NOT INCLUDED**

G. Exhibit G, Insurance.

H. Exhibit H, Dispute Resolution.

I. Exhibit I, Limitations of Liability. **NOT INCLUDED**

J. Exhibit J, Special Provisions. **NOT INCLUDED**

Copyright © 2008 National Society of Professional Engineers for EJCDC. All rights reserved.

K. Exhibit K, Amendment to Owner-Engineer Agreement.

8.02 *Total Agreement:*

A. This Agreement, (together with the exhibits identified above) constitutes the entire agreement between Owner and Engineer and supersedes all prior written or oral understandings. This Agreement may only be amended, supplemented, modified, or canceled by a duly executed written instrument based on the format of Exhibit K to this Agreement.

8.03 *Designated Representatives:*

A. With the execution of this Agreement, Engineer and Owner shall designate specific individuals to act as Engineer's and Owner's representatives with respect to the services to be performed or furnished by Engineer and responsibilities of Owner under this Agreement. Such an individual shall have authority to transmit instructions, receive information, and render decisions relative to the Project on behalf of the respective party whom the individual represents.

8.04 *Engineer's Certifications:*

A. Engineer certifies that it has not engaged in corrupt, fraudulent, or coercive practices in competing for or in executing the Agreement. For the purposes of this Paragraph 8.04:

1. "corrupt practice" means the offering, giving, receiving, or soliciting of any thing of value likely to influence the action of a public official in the selection process or in the Agreement execution;

2. "fraudulent practice" means an intentional misrepresentation of facts made (a) to influence the selection process or the execution of the Agreement to the detriment of Owner, or (b) to deprive Owner of the benefits of free and open competition;

3. "coercive practice" means harming or threatening to harm, directly or indirectly, persons or their property to influence their participation in the selection process or affect the execution of the Agreement.

Copyright © 2008 National Society of Professional Engineers for EJCDC. All rights reserved.

IN WITNESS WHEREOF, the parties hereto have executed this Agreement, the Effective Date of which is indicated on page 1.

Owner:	Engineer:
City of Peculiar, Missouri	Lamp, Rynearson & Associates, Inc., **dba Larkin Lamp Rynearson**
By:	By: **Loren M. Steenson, P.E.**
Title:	Title: **Senior Vice-President**
Date Signed:	Date Signed:
	Engineer License or Firm's Certificate No. **2013011903 valid to 12/31/15**
	State of: **Missouri**
Address for giving notices:	Address for giving notices:
250 S. Main Street	Lamp, Rynearson & Associates, Inc.
Peculiar, Missouri 64078	14710 West Dodge Road, Ste. 100
	Omaha, NE 68154-2027
Designated Representative (Paragraph 8.03.A):	Designated Representative (Paragraph 8.03.A):
Carl Brooks, P.E.	**Anthony P. O'Malley, P.E.**
Title: **City Engineer**	Title: **Water Group Leader**
Phone Number: **(816) 779-2228**	Phone Number: **(816) 823-7282**
Facsimile Number: **(816) 779-5213**	Facsimile Number: **(816) 361-0045**
E-Mail Address: **cbrooks@ cityofpeculiar.com**	E-Mail Address: **Tony.OMalley@LRA-Inc.com**

Copyright © 2008 National Society of Professional Engineers for EJCDC. All rights reserved.

EXHIBIT A
Engineer's Services

Engineer shall provide Basic and Additional Services as set forth below and in accordance with the schedule included at the end of this Exhibit A.

BASIC SERVICES

A1.01 *Study Phase* ***(Design Memorandum)***

A. Engineer shall:

1. Consult with Owner to define and clarify Owner's requirements for the Project and available data.

2. Advise Owner of any need for Owner to provide data or services of the types described in Exhibit B which are not part of Engineer's Basic Services.

3. Identify, consult with, and analyze requirements of governmental authorities having jurisdiction to approve the portions of the Project designed or specified by Engineer, including but not limited to mitigating measures identified in the environmental assessment.

4. Identify and evaluate alternate solutions available to Owner and, after consultation with Owner, recommend to Owner those solutions which in Engineer's judgment meet Owner's requirements for the Project.

~~5.~~ Perform or provide the following additional Study Phase tasks or deliverables: **Go over alignment in the field with Owner representatives. Meet with Owner and MoDOT to discuss sidewalk placement and limits.**

A1.02 *Preliminary Design Phase*

A. Engineer shall:

1. Prepare Preliminary Design Phase documents consisting of preliminary drawings of the Project.

2. Provide necessary field surveys and topographic and utility mapping for design purposes. Utility mapping will be based upon information obtained from utility owners.

3. Advise Owner if additional reports, data, information, or services of the types described in Exhibit B are necessary and assist Owner in obtaining such reports, data, information, or services.

4. Based on the information contained in the Preliminary Design Phase documents, prepare an opinion of probable Construction Cost and assist Owner in collating the various cost categories which comprise Total Project Costs.

5. Perform or provide the following additional Preliminary Design Phase tasks or deliverables: **Facilitate a utility coordination meeting. Facilitate a public meeting with Owner and affected property owners.**

6. Furnish review copies of the Preliminary Design Phase documents and any other deliverables to Owner and review them with Owner. Owner shall submit to Engineer any comments regarding the Preliminary Design Phase documents and any other deliverables.

7. Revise the Preliminary Design Phase documents and any other deliverables in response to Owner's comments, as appropriate, and furnish to Owner copies of the revised Preliminary Design Phase documents, opinion of probable Construction Cost, and any other deliverables.

B. Engineer's services under the Preliminary Design Phase will be considered complete on the date when the revised Preliminary Design Phase documents, opinion of probable Construction Cost, and any other deliverables have been delivered to Owner.

A1.03 *Final Design Phase*

A. After acceptance by Owner of the Preliminary Design Phase documents, opinion of probable Construction Cost as determined in the Preliminary Design Phase, and any other deliverables subject to any Owner-directed modifications or changes in the scope, extent, character, or design requirements of or for the Project, and upon written authorization from Owner, Engineer shall:

1. Prepare final Drawings and Specifications indicating the scope, extent, and character of the Work to be performed and furnished by Contractor.

2. Provide technical criteria, written descriptions, and design data for Owner's use in filing applications for permits from or approvals of governmental authorities having jurisdiction to review or approve the final design of the Project; assist Owner in consultations with such authorities; and revise the Drawings and Specifications in response to directives from such authorities.

3. Advise Owner of any adjustments to the opinion of probable Construction Cost known to Engineer.

4. Perform or provide the following additional Final Design Phase tasks or deliverables: **Submit final plans and specifications with hydraulics and a construction permit application to the MoDNR. Prepare a Storm Water Pollution Prevention Plan (SWPPP) per MoDNR requirements. In bid documents, require contractor to video project route prior to initiating construction.**

5. Prepare and furnish bidding documents for review by Owner, its legal counsel, and other advisors, and assist Owner in the preparation of other related documents. Following receipt, Owner shall submit to Engineer any comments or instructions for revisions.

6. Revise the bidding documents in accordance with comments and instructions from the Owner, as appropriate, and submit final copies of the bidding documents, a revised opinion of probable Construction Cost, and any other deliverables to Owner.

B. Engineer's services under the Final Design Phase will be considered complete on the date when the submittals required by Paragraph A1.03.A.6 have been delivered to Owner.

A1.04 *Bidding or Negotiating Phase*

A. After acceptance by Owner of the bidding documents and the most recent opinion of probable Construction Cost as determined in the Final Design Phase, and upon written authorization by Owner to proceed, Engineer shall:

1. Assist Owner in advertising for and obtaining bids or proposals for the Work and, where applicable, maintain a record of prospective bidders to whom Bidding Documents have been issued, attend pre-bid conferences, if any, and receive and process contractor deposits or charges for the bidding documents.

2. Issue addenda as appropriate to clarify, correct, or change the bidding documents.

3. Provide information or assistance needed by Owner in the course of any negotiations with prospective contractors.

4. Consult with Owner as to the acceptability of subcontractors, suppliers, and other individuals and entities proposed by prospective contractors for those portions of the Work as to which such acceptability is required by the bidding documents.

5. If bidding documents require, the Engineer shall evaluate and determine the acceptability of "or equals" and substitute materials and equipment proposed by bidders, but subject to the provisions of paragraph A2.02.A.2 of this Exhibit A.

6. ~~Attend the Bid opening, prepare Bid tabulation sheets, and a~~ **A**ssist Owner in evaluating Bids or proposals and in assembling and awarding contracts for the Work.

7. Perform or provide the following additional Bidding or Negotiating Phase tasks or deliverables: None.[A1]

~~B.~~ The Bidding or Negotiating Phase will be considered complete upon commencement of the Construction Phase or upon cessation of negotiations with prospective contractors ~~(except as may be required if Exhibit F is a part of this Agreement).~~

A1.05 *Construction Phase*

A. Upon successful completion of the Bidding and Negotiating Phase, and upon written authorization from Owner, Engineer shall:

1. *General Administration of Construction Contract:* Consult with Owner and act as Owner's representative as provided in the Construction Contract. The extent and limitations of the duties, responsibilities, and authority of Engineer as assigned in the Construction Contract shall not be modified, except as Engineer may otherwise agree in writing. All of Owner's instructions to Contractor will be issued through Engineer, which shall have authority to act on behalf of Owner in dealings with Contractor to the extent provided in this Agreement and the Construction Contract except as otherwise provided in writing.

2. *Resident Project Representative (RPR):* **DELETED** ~~Provide the services of an RPR at the Site to assist the Engineer and to provide more extensive observation of Contractor's work. Duties, responsibilities, and authority of the RPR are as set forth in Exhibit D. The furnishing of such RPR's services will not limit, extend, or modify Engineer's responsibilities or authority except as expressly set forth in Exhibit D.~~ ~~[*If Engineer will not be providing the services of an RPR, then delete this Paragraph 2 by inserting the word "DELETED" after the paragraph title, and do not include Exhibit D.*][A2]~~

3. *Selecting Independent Testing Laboratory:* Assist Owner in the selection of an independent testing laboratory to perform the services identified in Exhibit B, Paragraph B2.01.0.

4. *Pre-Construction Conference:* Participate in a Pre-Construction Conference prior to commencement of Work at the Site.

5. *Schedules:* Receive, review, and determine the acceptability of any and all schedules that Contractor is required to submit to Engineer, including the Progress Schedule, Schedule of Submittals, and Schedule of Values.

6. *Baselines and Benchmarks:* As appropriate, establish baselines and benchmarks for locating the Work which in Engineer's judgment are necessary to enable Contractor to proceed.

7. *Visits to Site and Observation of Construction:* In connection with observations of Contractor's Work while it is in progress:

   a. Make visits to the Site at intervals appropriate to the various stages of construction, as Engineer deems necessary, to observe as an experienced and qualified design professional the progress of Contractor's executed Work. Such visits and observations by Engineer, and the Resident Project Representative, if any, are not intended to be exhaustive or to extend to every aspect of Contractor's Work in progress or to involve detailed inspections of Contractor's Work in progress beyond the responsibilities specifically assigned to Engineer in this Agreement and the Contract Documents, but rather are to be limited to spot checking, selective sampling, and similar methods of general observation of the Work based on Engineer's exercise of professional judgment, as assisted by the Resident Project Representative, if any. Based on information obtained during such visits and observations, Engineer will determine in general if the Work is proceeding in accordance with the Contract Documents, and Engineer shall keep Owner informed of the progress of the Work.

   b. The purpose of Engineer's visits to, and representation by the Resident Project Representative, if any, at the Site, will be to enable Engineer to better carry out the duties and responsibilities assigned to and undertaken by Engineer during the Construction Phase, and, in addition, by the exercise of Engineer's efforts as an experienced and qualified design professional, to provide for Owner a greater degree of confidence that the completed Work will conform in general to the Contract Documents and that Contractor has implemented and maintained the integrity of the design concept of the completed Project as a functioning whole as indicated in the Contract Documents. Engineer shall not, during such visits or as a result of such observations of Contractor's Work in progress, supervise, direct, or have control over Contractor's Work, nor shall Engineer have authority over or responsibility for the means, methods, techniques, sequences, or procedures of construction selected or used by Contractor, for security or safety at the Site, for safety precautions and programs incident to Contractor's Work, nor for any failure of Contractor to comply with Laws and Regulations applicable to Contractor's furnishing and performing the Work. Accordingly, Engineer neither guarantees the performance of any Contractor nor assumes responsibility for any Contractor's failure to furnish or perform the Work in accordance with the Contract Documents.

8. *Defective Work:* Reject Work if, on the basis of Engineer's observations, Engineer believes that such Work (a) is defective under the standards set forth in the Contract Documents, (b) will not produce a completed Project that conforms to the Contract Documents, or (c) will imperil the integrity of the design concept of the completed Project as a functioning whole as indicated by the Contract Documents.

9. *Clarifications and Interpretations; Field Orders:* Issue necessary clarifications and interpretations of the Contract Documents as appropriate to the orderly completion of Contractor's work. Such clarifications and interpretations will be consistent with the intent of and reasonably inferable from the Contract Documents. Subject to any limitations in the Contract Documents, Engineer may issue field orders authorizing minor variations in the Work from the requirements of the Contract Documents.

10. *Requests for Information:* The Engineer shall provide, with reasonable promptness, written responses to "Requests for Information" from the Contractor for clarification and interpretation of the requirements of the Contract Documents. Such services shall be provided as part of the Engineer's basic services. However, if the Contractor's requests for information, clarification or interpretation are, in the Engineer's professional opinion, for information readily apparent from reasonable observation of field conditions or a review of the Contract Documents, or are reasonably inferable therefrom, the Engineer shall be entitled to compensation for Additional Services in accordance with Exhibit C, for the Engineer's time spent responding to such requests.

11. *Change Orders and Work Change Directives:* Recommend change orders and work change directives to Owner, as appropriate~~, and prepare change orders and work change directives as required~~.

12. *Shop Drawings and Samples:* Review or take other appropriate action in respect to Shop Drawings and Samples and other data which Contractor is required to submit, but only for conformance with the information given in the Contract Documents and compatibility with the design concept of the completed Project as a functioning whole as indicated by the Contract Documents. Such reviews and approvals or other action will not extend to means, methods, techniques, sequences, or procedures of construction or to safety precautions and programs incident thereto. Engineer shall meet any Contractor's submittal schedule that Engineer has accepted. Unless Engineer specifically requests that Shop Drawings be submitted for review, Engineer will not accept, review or transmit any Shop Drawing submittals not specifically requested.

13. *Substitutes and "or-equal":* Evaluate and determine the acceptability of substitute or "or-equal" materials and equipment proposed by Contractor, but subject to the provisions of Paragraph A2.02.A.2 of this Exhibit A.

14. *Inspections and Tests:* Require such special inspections or tests of Contractor's work as deemed reasonably necessary, and receive and review all certificates of inspections, tests, and approvals required by Laws and Regulations or the Contract Documents. Engineer's review of such certificates will be for the purpose of determining that the results certified indicate compliance with the Contract Documents and will not constitute an independent evaluation that the content or procedures of such inspections, tests, or approvals comply with the requirements of the Contract Documents. Engineer shall be entitled to rely on the results of such tests.

15. *Disagreements between Owner and Contractor*: Render formal written decisions on all duly submitted issues relating to the acceptability of Contractor's work or the interpretation of the requirements of the Contract Documents pertaining to the execution, performance, or progress of Contractor's Work; review each duly submitted Claim by Owner or Contractor, and in writing either deny such Claim in whole or in part, approve such Claim, or decline to resolve such Claim if Engineer in its discretion concludes that to do so would be inappropriate. In rendering such decisions, Engineer shall be fair and not show partiality to Owner or Contractor and shall not be liable in connection with any decision rendered in good faith in such capacity.

16. *Applications for Payment:* Based on Engineer's observations as an experienced and qualified design professional and on review of Applications for Payment and accompanying supporting documentation:

    a. Determine the amounts that Engineer recommends Contractor be paid. Such recommendations of payment will be in writing and will constitute Engineer's representation to Owner, based on such observations and review, that, to the best of Engineer's knowledge, information and belief, Contractor's Work has progressed to the point indicated, the Work is generally in accordance with the Contract Documents (subject to an evaluation of the Work as a functioning whole prior to or upon Substantial Completion, to the results of any subsequent tests called for in the Contract Documents, and to any other qualifications stated in the recommendation), and the conditions precedent to Contractor's being entitled to such payment appear to have been fulfilled in so far as it is Engineer's responsibility to observe Contractor's Work. In the case of unit price work, Engineer's recommendations of payment will include final determinations of quantities and classifications of Contractor's Work (subject to any subsequent adjustments allowed by the Contract Documents).

    b. By recommending any payment, Engineer shall not thereby be deemed to have represented that observations made by Engineer to check the quality or quantity of Contractor's Work as it is performed and furnished have been exhaustive, extended to every aspect of Contractor's Work in progress, or involved detailed inspections of the Work beyond the responsibilities specifically assigned to Engineer in this Agreement and the Contract Documents. Neither Engineer's review of Contractor's Work for the purposes of recommending payments nor Engineer's recommendation of any payment including final payment will impose on Engineer responsibility to supervise, direct, or

control Contractor's Work in progress or for the means, methods, techniques, sequences, or procedures of construction or safety precautions or programs incident thereto, or Contractor's compliance with Laws and Regulations applicable to Contractor's furnishing and performing the Work. It will also not impose responsibility on Engineer to make any examination to ascertain how or for what purposes Contractor has used the moneys paid on account of the Contract Price, or to determine that title to any portion of the Work in progress, materials, or equipment has passed to Owner free and clear of any liens, claims, security interests, or encumbrances, or that there may not be other matters at issue between Owner and Contractor that might affect the amount that should be paid.

17. *Contractor's Completion Documents:* Receive, review, and transmit to Owner maintenance and operating instructions, schedules, guarantees, bonds, certificates or other evidence of insurance required by the Contract Documents, certificates of inspection, tests and approvals, Shop Drawings, Samples and other data approved as provided under Paragraph A1.05.A.11, and transmit the annotated record documents which are to be assembled by Contractor in accordance with the Contract Documents to obtain final payment. The extent of such review by Engineer will be limited as provided in Paragraph A1.05.A.11. Unless Engineer specifically requests that Shop Drawings be submitted for review, Engineer will not accept, review or transmit any Shop Drawing submittals not specifically requested.

18. *Substantial Completion:* Promptly after notice from Contractor that Contractor considers the entire Work ready for its intended use, in company with Owner and Contractor, visit the Project to determine if the Work is substantially complete. If after considering any objections of Owner, Engineer considers the Work substantially complete, Engineer shall deliver a Statement of Completion to Owner.

19. *Additional Tasks:* Perform or provide the following additional Construction Phase tasks or deliverables**: Preparation of Record Drawings based on Contractors and Owner's representative's mark-ups. Furnish two sets to the City and an electronic copy.**

20. *Final Payment to Contractor:* Conduct a final visit to the Project to determine if the completed Work of Contractor is acceptable so that Engineer may recommend, in writing, final payment to Contractor.

B. *Duration of Construction Phase:* The Construction Phase will commence with the execution of the first Construction Contract for the Project or any part thereof and will terminate upon written recommendation by Engineer for final payment to Contractors.

C. *Limitation of Responsibilities:* Engineer shall not be responsible for the acts or omissions of any Contractor, Subcontractor or Supplier, or other individuals or entities performing or furnishing any of the Work, for safety or security at the Site, or for safety precautions and programs incident to Contractor's Work, during the Construction Phase or otherwise. Engineer shall not be responsible for the failure of any Contractor to perform or furnish the Work in accordance with the Contract Documents.

ADDITIONAL SERVICES

A2.01 *Additional Services Requiring Owner's Written Authorization*

A. If authorized in writing by Owner, Engineer shall furnish or obtain from others Additional Services of the types listed below.

1. Preparation of applications and supporting documents (in addition to those furnished under Basic Services) for private or governmental grants, loans, or advances in connection with the Project; preparation or review of environmental assessments and impact statements; review and evaluation of the effects on the design requirements for the Project of any such statements and documents prepared

by others; and assistance in obtaining approvals of authorities having jurisdiction over the anticipated environmental impact of the Project.

2. Services to make measured drawings of or to investigate existing conditions or facilities, or to verify the accuracy of drawings or other information furnished by Owner or others.

3. Services resulting from significant changes in the scope, extent, or character of the portions of the Project designed or specified by Engineer or its design requirements including, but not limited to, changes in size, complexity, Owner's schedule, character of construction, or method of financing; and revising previously accepted studies, reports, Drawings, Specifications, or Contract Documents when such revisions are required by changes in Laws and Regulations enacted subsequent to the Effective Date or are due to any other causes beyond Engineer's control.

4. Services resulting from Owner's request to evaluate additional Study Phase alternative solutions beyond those identified in Paragraph A1.01.A.4.

5. Services required as a result of Owner's providing incomplete or incorrect Project information to Engineer.

6. Providing renderings or models for Owner's use.

7. Undertaking investigations and studies including, but not limited to, detailed consideration of operations, maintenance, and overhead expenses; the preparation of financial feasibility and cash flow studies, rate schedules, and appraisals; assistance in obtaining financing for the Project; evaluating processes available for licensing, and assisting Owner in obtaining process licensing; detailed quantity surveys of materials, equipment, and labor; and audits or inventories required in connection with construction performed by Owner.

8. Furnishing services of Consultants for other than Basic Services.

9. Services during out-of-town travel required of Engineer other than for visits to the Site or Owner's office.

10. Preparing for, coordinating with, participating in and responding to structured independent review processes, including, but not limited to, construction management, cost estimating, project peer review, value engineering, and constructability review requested by Owner; and performing or furnishing services required to revise studies, reports, Drawings, Specifications, or other Bidding Documents as a result of such review processes.

11. Preparing additional Bidding Documents or Contract Documents for alternate bids or prices requested by Owner for the Work or a portion thereof.

12. Assistance in connection with Bid protests, rebidding, or renegotiating contracts for construction, materials, equipment, or services.

13. Providing construction surveys and staking to enable Contractor to perform its work other than as required under Paragraph A1.05.A.6, and any type of property surveys or related engineering services needed for the transfer of interests in real property; and providing other special field surveys.

14. Providing Construction Phase services beyond the original date for completion and readiness for final payment of Contractor.

15. Providing assistance in responding to the presence of any Constituent of Concern at the Site, in compliance with current Laws and Regulations.

16. ~~Preparing Record Drawings showing appropriate record information based on Project annotated record documents received from Contractor, and furnishing such Record Drawings to Owner.~~

17. Preparation of operation and maintenance manuals.

18. Preparing to serve or serving as a consultant or witness for Owner in any litigation, arbitration, or other dispute resolution process related to the Project.

19. Providing more extensive services required to enable Engineer to issue notices or certifications requested by Owner.

20. Assistance in connection with the adjusting of Project equipment and systems.

21. Assistance to Owner in training Owner's staff to operate and maintain Project equipment and systems.

22. Assistance to Owner in developing procedures for (a) control of the operation and maintenance of Project equipment and systems, and (b) related record-keeping.

23. Overtime work requiring higher than regular rates.

24. . Other services performed or furnished by Engineer not otherwise provided for in this Agreement. **Including, but not limited to: Preparation of easement descriptions and exhibits, assistance in obtaining easements including ligitation, if necessary, and Funding Agency administration during design and construction.**

A2.02 Additional Services Not Requiring Owner's Written Authorization

A. Engineer shall advise Owner in advance that Engineer is will immediately commence to perform or furnish the Additional Services of the types listed below. For such Additional Services, Engineer need not request or obtain specific advance written authorization from Owner. Engineer shall cease performing or furnishing such Additional Services upon receipt of written notice from Owner.

1. Services in connection with work change directives and change orders to reflect changes requested by Owner.

2. Services in making revisions to Drawings and Specifications occasioned by the acceptance of substitute materials or equipment other than "or-equal" items; services after the award of the Construction Contract in evaluating and determining the acceptability of a proposed "or equal" or substitution which is found to be inappropriate for the Project; evaluation and determination of an excessive number of proposed "or equals" or substitutions, whether proposed before or after award of the Construction Contract.

3. Services resulting from significant delays, changes, or price increases occurring as a direct or indirect result of materials, equipment, or energy shortages.

4. Additional or extended services during construction made necessary by (1) emergencies or acts of God endangering the Work (advance notice not required), (2) the presence at the Site of any Constituent of Concern or items of historical or cultural significance, (3) Work damaged by fire or other cause during construction, (4) a significant amount of defective, neglected, or delayed work by Contractor, (5) acceleration of the progress schedule involving services beyond normal working hours, or (6) default by Contractor.

5. Services in connection with any partial utilization of any part of the Work by Owner prior to Substantial Completion.

6. Evaluating an unreasonable claim or an excessive number of claims submitted by Contractor or others in connection with the Work.

7. Services during the Construction Phase rendered after the original date for completion of the Work referred to in A1.05.B.

8. Reviewing a Shop Drawing more than three times, as a result of repeated inadequate submissions by Contractor.

9. While at the Site, compliance by Engineer and its staff with those terms of Owner's or Contractor's safety program provided to Engineer subsequent to the Effective Date that exceed those normally required of engineering personnel by federal, state, or local safety authorities for similar construction sites.

SCHEDULE

Study Phase:	**(Alignment Study and Design Memorandum)**	**14 days**
Preliminary Design Phase:	**(Includes survey)**	**90 days**
Final Design Phase:		**30 days**
Bidding or Negotiation Phase:	**(After R.O.W. and permits are obtained)**	**45 days**
Construction Phase:	**(After Owner issues contractor's notice to proceed)**	**150 days**

This is **EXHIBIT B**, consisting of 3 pages, referred to in and part of the **Agreement between Owner and Engineer for Professional Services** dated _____, 2014.

Owner's Responsibilities

Article 2 of the Agreement is supplemented to include the following agreement of the parties.

B2.01 In addition to other responsibilities of Owner as set forth in this Agreement, Owner shall at its expense:

A. Provide Engineer with all criteria and full information as to Owner's requirements for the Project, including design objectives and constraints, space, capacity and performance requirements, flexibility, and expandability, and any budgetary limitations; and furnish copies of all design and construction standards which Owner will require to be included in the Drawings and Specifications; and furnish copies of Owner's standard forms, conditions, and related documents for Engineer to include in the Bidding Documents, when applicable.

B. Furnish to Engineer any other available information pertinent to the Project including reports and data relative to previous designs, or investigation at or adjacent to the Site.

C. Following Engineer's assessment of initially-available Project information and data and upon Engineer's request, furnish or otherwise make available such additional Project related information and data as is reasonably required to enable Engineer to complete its Basic and Additional Services. Such additional information or data would generally include the following:

1. Property descriptions.

2. Zoning, deed, and other land use restrictions.

3. Property, boundary, easement, right-of-way, and other special surveys or data, including establishing relevant reference points.

4. Explorations and tests of subsurface conditions at or contiguous to the Site, drawings of physical conditions relating to existing surface or subsurface structures at the Site, or hydrographic surveys, with appropriate professional interpretation thereof.

5. Environmental assessments, audits, investigations, and impact statements, and other relevant environmental or cultural studies as to the Project, the Site, and adjacent areas.

6. Data or consultations as required for the Project but not otherwise identified in the Agreement or the Exhibits thereto.

D. Give prompt written notice to Engineer whenever Owner observes or otherwise becomes aware of the presence at the Site of any Constituent of Concern, or of any other development that affects the scope or time of performance of Engineer's services, or any defect or nonconformance in Engineer's services, the Work, or in the performance of any Contractor.

E. Authorize Engineer to provide Additional Services as set forth in ~~Part 2 of~~ Exhibit A of the Agreement as required.

F. Arrange for safe access to and make all provisions for Engineer to enter upon public and private property as required for Engineer to perform services under the Agreement.

Copyright © 2008 National Society of Professional Engineers for EJCDC. All rights reserved.

G. Examine all alternate solutions, studies, reports, sketches, Drawings, Specifications, proposals, and other documents presented by Engineer (including obtaining advice of an attorney, insurance counselor, and other advisors or consultants as Owner deems appropriate with respect to such examination) and render in writing timely decisions pertaining thereto.

H. Provide reviews, approvals, and permits from all governmental authorities having jurisdiction to approve all phases of the Project designed or specified by Engineer and such reviews, approvals, and consents from others as may be necessary for completion of each phase of the Project.

I. Recognizing and acknowledging that Engineer's services and expertise do not include the following services, provide, as required for the Project:

1. Accounting, bond and financial advisory, independent cost estimating, and insurance counseling services.

2. Legal services with regard to issues pertaining to the Project as Owner requires, Contractor raises, or Engineer reasonably requests.

3. Such auditing services as Owner requires to ascertain how or for what purpose Contractor has used the moneys paid.

J. Place and pay for advertisement for Bids in appropriate publications.

K. Advise Engineer of the identity and scope of services of any independent consultants employed by Owner to perform or furnish services in regard to the Project, including, but not limited to, cost estimating, project peer review, value engineering, and constructability review.

L. Furnish to Engineer data as to Owner's anticipated costs for services to be provided by others (including, but not limited to, accounting, bond and financial, independent cost estimating, insurance counseling, and legal advice) for Owner so that Engineer may assist Owner in collating the various cost categories which comprise Total Project Costs.

M. If Owner designates a construction manager or an individual or entity other than, or in addition to, Engineer to represent Owner at the Site, define and set forth as an attachment to this Exhibit B the duties, responsibilities, and limitations of authority of such other party and the relation thereof to the duties, responsibilities, and authority of Engineer.

N. If more than one prime contract is to be awarded for the Work designed or specified by Engineer, designate a person or entity to have authority and responsibility for coordinating the activities among the various prime Contractors, and define and set forth the duties, responsibilities, and limitations of authority of such individual or entity and the relation thereof to the duties, responsibilities, and authority of Engineer as an attachment to this Exhibit B that is to be mutually agreed upon and made a part of this Agreement before such services begin.

O. Attend the pre-bid conference, bid opening, pre-construction conferences, construction progress and other job related meetings, and Substantial Completion and final payment visits to the Project.

P. Provide the services of an independent testing laboratory to perform all inspections, tests, and approvals of samples, materials, and equipment required by the Contract Documents, or to evaluate the performance of materials, equipment, and facilities of Owner, prior to their incorporation into the Work with appropriate professional interpretation thereof.

Copyright © 2008 National Society of Professional Engineers for EJCDC. All rights reserved.

Q. Provide Engineer with the findings and reports generated by the entities providing services to Owner pursuant to this paragraph.

R. Inform Engineer in writing of any specific requirements of safety or security programs that are applicable to Engineer, as a visitor to the Site.

S. Perform or provide the following additional services: **Including, but not limited to, obtaining easements on private and/or public right-of-way where identified as necessary by the ENGINEER during the design phase, opening bids, preparation of bid tabulation, change orders, work change directives, and preconstruction minutes~~.~~ Providing resident project representative inspection.**

Copyright © 2008 National Society of Professional Engineers for EJCDC. All rights reserved.

EXHIBIT C
Payments to Engineer for Services and Reimbursable Expenses

C1.01 *Compensation for Basic Services (including Resident Project Representative) – Standard Hourly Rate Method of Payment* ***with Maximum Fee Limit.***

A. Owner shall pay Engineer for Basic Services set forth in Exhibit A, including for services of Engineer's Resident Project Representative, if any, as follows:

1. An amount equal to the cumulative hours charged to the Project by each class of Engineer's personnel times Standard Hourly Rates for each applicable billing class for all services performed on the Project, plus Reimbursable Expenses and Engineer's Consultants' charges, if any.

2. Engineer's Reimbursable Expenses Schedule and Standard Hourly Rates are set forth in Paragraph C1.06 and Paragraph C1.07, respectively.

3. The total compensation for services under Paragraph C1.01 is **limited** ~~estimated~~ to **maximum of** ~~be~~ $ **116,950.00** based on the following estimated distribution of compensation:

   a. **Engineering Design, Construction Admin., & Part-time Const. Observation** $ **74,450.00**

   b. **Engineering – Surveying** $ **42,500.00**

4. Engineer may alter the distribution of compensation between individual phases of the work noted herein to be consistent with services actually rendered, but shall not exceed the total estimated compensation amount unless approved in writing by Owner. See also C1.03.C.2 below.

5. The total estimated compensation for Engineer's services included in the breakdown by phases as noted in Paragraph C1.01.A.3 incorporates all labor, overhead, profit, Reimbursable Expenses and Engineer's Consultants' charges.

6. The amounts billed for Engineer's services under Paragraph C1.01 will be based on the cumulative hours charged to the Project during the billing period by each class of Engineer's employees times Standard Hourly Rates for each applicable billing class, plus Reimbursable Expenses and Engineer's Consultants' charges.

7. The Standard Hourly Rates and Reimbursable Expenses Schedule will be adjusted annually (as of April 1) to reflect equitable changes in the compensation payable to Engineer.

C1.02 *Compensation For Reimbursable Expenses*

A. Owner shall pay Engineer for all Reimbursable Expenses at the rates set forth in Paragraph C1.06.

B. Reimbursable Expenses include the following categories: transportation and subsistence incidental thereto; providing and maintaining field office facilities including furnishings and utilities; toll telephone calls and mobile phone charges; reproduction of reports, Drawings, Specifications, Bidding Documents, and similar Project-related items in addition to those required under Exhibit A. In addition, if authorized in advance by Owner, Reimbursable Expenses will also include expenses incurred for the use of highly specialized equipment.

C. The amounts payable to Engineer for Reimbursable Expenses will be the Project-related internal expenses actually incurred or allocated by Engineer, plus all invoiced external Reimbursable Expenses allocable to the Project, the latter multiplied by a factor of 1.15.

C1.03 *Compensation For Standard Hourly Rate Payments:*

A. Owner shall pay Engineer an amount equal to the cumulative hours charged to the Project by each class of Engineer's personnel times Standard Hourly Rates for each applicable billing class for all services performed on the Project at the rates set forth in Paragraph C1.07.

C1.04 *Other Provisions Concerning Payment*

A. Whenever Engineer is entitled to compensation for the charges of Engineer's Consultants, those charges shall be the amounts billed by Engineer's Consultants to Engineer times a factor of 1.0.

B. Factors. The external Reimbursable Expenses and Engineer's Consultants' factors include Engineer's overhead and profit associated with Engineer's responsibility for the administration of such services and costs.

C. Estimated Compensation Amounts:

1. Engineer's estimate of the amounts that will become payable for specified services are only estimates for planning purposes, are not binding on the parties, and are not the minimum or maximum amounts payable to Engineer under the Agreement.

2. When estimated compensation amounts have been stated herein and it subsequently becomes apparent to Engineer that the total compensation amount thus estimated will be exceeded, Engineer shall give Owner written notice thereof, allowing Owner to consider its options, including suspension or termination of Engineer's services for Owner's convenience. Upon notice, Owner and Engineer promptly shall review the matter of services remaining to be performed and compensation for such services. Owner shall either exercise its right to suspend or terminate Engineer's services for Owner's convenience, agree to such compensation exceeding said estimated amount, or agree to a reduction in the remaining services to be rendered by Engineer, so that total compensation for such services will not exceed said estimated amount when such services are completed. If Owner decides not to suspend the Engineer's services during the negotiations and Engineer exceeds the estimated amount before Owner and Engineer have agreed to an increase in the compensation due Engineer or a reduction in the remaining services, then Engineer shall be paid for all services rendered hereunder.

D. To the extent necessary to verify Engineer's charges and upon Owner's timely request, Engineer shall make copies of such records available to Owner at cost.

C1.05 Compensation for Additional Services

A. Owner shall pay Engineer for Additional Services, if any, as follows:

1. General: For services of Engineer's personnel engaged directly on the Project pursuant to Exhibit A, except for services as a consultant or witness under Exhibit A, (which if needed shall be separately negotiated based on the nature of the required consultation or testimony) an amount equal to the cumulative hours charged to the Project by each class of Engineer's personnel times Standard Hourly Rates for each applicable billing class for all Additional Services performed on the Project, plus related Reimbursable Expenses and Engineer's Consultant's charges, if any.

B. Compensation For Reimbursable Expenses:

1. For those Reimbursable Expenses that are not accounted for in the compensation for Basic Services under Paragraph C1.01 and are directly related to the provision of Additional Services, Owner shall pay Engineer at the rates set forth in Paragraph C1.06.

2. Reimbursable Expenses include the following categories: transportation and subsistence incidental thereto; providing and maintaining field office facilities including furnishings and utilities; toll telephone calls and mobile phone charges; reproduction of reports, Drawings, Specifications, Bidding Documents, and similar Project-related items in addition to those required under Exhibit A. In addition, if authorized in advance by Owner, Reimbursable Expenses will also include expenses incurred for the use of highly specialized equipment.

3. The amounts payable to Engineer for Reimbursable Expenses, if any, will be the Additional Services-related internal expenses actually incurred or allocated by Engineer, plus all invoiced external Reimbursable Expenses allocable to such Additional Services, the latter multiplied by a factor of 1.15.

4. The Reimbursable Expenses Schedule will be adjusted annually (as of April 1) to reflect equitable changes in the compensation payable to Engineer.

C. Compensation For Standard Hourly Rate Payments:

1. For Additional Services, Owner shall pay Engineer an amount equal to the cumulative hours charged to the Project by each class of Engineer's personnel times Standard Hourly Rates for each applicable billing class for all services performed on the Project at the rates set forth in Paragraph C1.07.

D. Other Provisions Concerning Payment For Additional Services:

1. Whenever Engineer is entitled to compensation for the charges of Engineer's Consultants, those charges shall be the amounts billed by Engineer's Consultants to Engineer times a factor of 1.0.

2. Factors: The external Reimbursable Expenses and Engineer's Consultant's Factors include Engineer's overhead and profit associated with Engineer's responsibility for the administration of such services and costs.

3. To the extent necessary to verify Engineer's charges and upon Owner's timely request, Engineer shall make copies of such records available to Owner at cost.

C1.06 Reimbursable Expenses Schedule

Current agreements for engineering services stipulate that the Reimbursable Expenses are subject to review and adjustment per Exhibit C. Reimbursable expenses for services performed on the date of the Agreement are[A3]:

Schedule #2 **3/30/14 – 03/28/15**

LAMP, RYNEARSON & ASSOCIATES, INC.
MISCELLANEOUS CHARGES

A. SUBSISTENCE:
Subsistence for employees away from headquarters shall be chargeable in accordance with the per diem schedule of the U.S. General Services Administration available at www.gsa.gov.

B. TRANSPORTATION:
Automobile transportation shall be charged for at the maximum IRS employee reimbursable rate per mile plus 15% for travel in connection with work on the project. Costs to Lamp, Rynearson & Associates, Inc., for commercial travel shall be chargeable at the actual cost incurred by Lamp, Rynearson & Associates, Inc.

C. MATERIALS:

All materials other than normal office supplies which are used by Lamp, Rynearson & Associates, Inc., in connection with the rendering of services shall be chargeable at actual cost plus 15 percent to cover general overhead and administration.

D. REPRODUCTIONS AND PLOTS:

All reproduction and plotting work performed by Lamp, Rynearson & Associates, Inc., shall be charged at the locally accepted commercial rate for such work. All outside photographic and direct-process reproduction costs advanced by Lamp, Rynearson & Associates, Inc., in connection with the rendering of services shall be charged at actual cost plus 15 percent to cover general overhead and administration.

E. SPECIAL EQUIPMENT:

The following items of special equipment, when used by Lamp, Rynearson & Associates, Inc., shall be charged for at the following rates:

Item	$ - Hourly Rate
Electronic Total Station	$15 - $25 /Hour
Robotic Total Station	$30 /Hour
w/RCS GPS Rover	$22 – $33 /Hour
GPS Base & Rover	$25 - $62 /Hour
4x4 ATV Polaris Ranger	$20 /Hour
Plots (Color) bond	$2.50 /SF
Plots (Color) mylar	$6.00 /SF
Plots (Color) photo paper	$6.00 /SF

All of the above rates are exclusive of operator.

Specialty material exclusive of above Plotter Rates.

F. FILING FEES AND OTHER COSTS ADVANCED:

All filing or permit fees and other similar outside costs which are advanced or paid by Lamp, Rynearson & Associates, Inc., shall be chargeable at actual cost plus 15 percent to cover general overhead and administration.

Periodically, this schedule may be revised and updated by Lamp, Rynearson & Associates, Inc., who reserves the right to substitute the new miscellaneous charges schedule upon 30 days' notice.

C1.07 Standard Hourly Rates Schedule

A. Standard Hourly Rates:

1. Standard Hourly Rates include salaries and wages paid to personnel in each billing class plus the cost of customary and statutory benefits, general and administrative overhead, non-project operating costs, and operating margin or profit.

2. The Standard Hourly Rates will be adjusted annually (as of April 1) to reflect equitable changes in the compensation payable to the Engineer.

3. The Standard Hourly Rates apply only as specified in Exhibit C.

B. Schedule:

Hourly rates for services performed on or after the date of the Agreement:

Lamp, Rynearson & Associates, Inc.	
HOURLY RATE SCHEDULE	
March 30, 2014 – March 28, 2015	
Position / Title	$ - Hourly Rate
Principal II	218.00
Sr. Group Leader III	216.00
Project Manager I	117.00
Sr. Project Manager II	143.00
Sr. Project Engr II	115.00
GIS Specialist III	86.00
Project Designer II	82.00
Sr. Project Designer III	131.00
Engineering Tech II	71.00
Construction Observer IV	78.00
Survey Project Mgr III	116.00
Sr. Survey Project Mgr I	126.00
Survey Technician II	73.00
Party Chief I	67.00
Party Chief II	75.00
Party Chief III	83.00
Survey Field Tech Apprentice	36.00
Survey Field Tech I	54.00
Survey Field Tech II	59.00
Survey Field Tech III	66.00
Administrative Assistant II	59.00

These charges include full compensation for payroll costs, general overhead, administration and anticipated profit on labor. Charges for items other than labor which are applicable to the project are listed on Schedule #2.

Personnel usually perform duties related to their classification; however, in the interest of efficiency, personnel with diversified experience may perform several types of work; in all cases, charges will be made according to payroll classification and not according to the type of work performed.

This is **EXHIBIT G**, consisting of __2__ pages, referred to in and part of the **Agreement between Owner and Engineer for Professional Services** dated_____, __2014__.

Insurance

Paragraph 6.04 of the Agreement is supplemented to include the following agreement of the parties.

G6.04 *Insurance*

A. The limits of liability for the insurance required by Paragraph 6.04.A and 6.04.B of the Agreement are as follows:

1. By Engineer:

a. Workers' Compensation: Statutory

b. Employer's Liability --

1) Each Accident: $100,000
2) Disease, Policy Limit: $500,000
3) Disease, Each Employee: $100,000

c. General Liability --

1) Each Occurrence (Bodily Injury and Property Damage): $1,000,000
2) General Aggregate: $2,000,000

d. Excess or Umbrella Liability --

1) Each Occurrence: $1,000,000
2) General Aggregate: $1,000,000

e. Automobile Liability --Combined Single Limit (Bodily Injury and Property Damage):

Each Accident $1,000,000

f. Professional Liability –

1) Each Claim Made $1,000,000
2) Annual Aggregate $1,000,000

Engineer agrees to maintain continuous professional liability coverage for the period of design and construction of this project, and for a period of two years following substantial completion.

g. Other (specify): $_____

2. By Owner:

a. Workers' Compensation: Statutory

b. Employer's Liability --

Copyright © 2008 National Society of Professional Engineers for EJCDC. All rights reserved.

1) Each Accident $100,000
2) Disease, Policy Limit $500,000
3) Disease, Each Employee $100,000

c. General Liability --

1) General Aggregate: $2,000,000
2) Each Occurrence (Bodily Injury and Property Damage): $1,000,000

d. Excess Umbrella Liability --

1) Each Occurrence: $1,000,000
2) General Aggregate: $1,000,000

e. Automobile Liability --Combined Single Limit (Bodily Injury and Property Damage):

Each Accident: $1,000,000

f. Other (specify): $_____

B. *Additional Insureds:*

1. The following persons or entities are to be listed on Owner's general liability policies of insurance as additional insureds, and on any applicable property insurance policy as loss payees, as provided in Paragraph 6.04.B:

a. Lamp, Rynearson & Associates, Inc. **dba Larkin Lamp Rynearson**
Engineer

b. (Survey subconsultant to be named **to the City** prior to authorization by Engineer)
Engineer's Consultant

c. _____
Engineer's Consultant

2. During the term of this Agreement the Engineer shall notify Owner of any other Consultant to be listed as an additional insured on Owner's general liability and property policies of insurance.

3. The Owner shall be listed on Engineer's general liability policy as provided in Paragraph 6.04.A.

Copyright © 2008 National Society of Professional Engineers for EJCDC. All rights reserved.

This is **EXHIBIT H**, consisting of **1** pages, referred to in and part of the **Agreement between Owner and Engineer for Professional Services** dated_____, **2014** .

Dispute Resolution

Paragraph 6.08 of the Agreement is amended and supplemented to include the following agreement of the parties:

H6.08 *Dispute Resolution*

A. *Mediation*: Owner and Engineer agree that they shall first submit any and all unsettled claims, counterclaims, disputes, and other matters in question between them arising out of or relating to this Agreement or the breach thereof ("Disputes") to mediation by ~~*[insert name of mediator, or mediation service]*~~ **a mediator approved by both Engineer and Owner and experienced in resolving disputes arising for the performance of engineering services**. Owner and Engineer agree to participate in the mediation process in good faith. The process shall be conducted on a confidential basis, and shall be completed within 120 days. If such mediation is unsuccessful in resolving a Dispute, then (1) the parties may mutually agree to a dispute resolution of their choice, or (2) either party may seek to have the Dispute resolved by a court of competent jurisdiction.

Copyright © 2008 National Society of Professional Engineers for EJCDC. All rights reserved.

~~This is **EXHIBIT I**, consisting of _____ pages, referred to in and part of the **Agreement between Owner and Engineer for Professional Services** dated _____, _____.~~

~~**Limitations of Liability**~~

~~Paragraph 6.10 of the Agreement is supplemented to include the following agreement of the parties:~~

~~A. *Limitation of Engineer's Liability*~~

~~1. *Engineer's Liability Limited to the Amount of $*_____[A4]~~~~: Notwithstanding any other provision of this Agreement, and to the fullest extent permitted by law, the total liability, in the aggregate, of Engineer and Engineer's officers, directors, members, partners, agents, employees, and Consultants, to Owner and anyone claiming by, through, or under Owner for any and all claims, losses, costs, or damages whatsoever arising out of, resulting from, or in any way related to the Project or the Agreement from any cause or causes, including but not limited to the negligence, professional errors or omissions, strict liability, breach of contract, indemnity obligations, or warranty express or implied of Engineer or Engineer's officers, directors, members, partners, agents, employees, or Consultants shall not exceed the total amount of $_____[A5].~~

Copyright © 2008 National Society of Professional Engineers for EJCDC. All rights reserved.

This is **EXHIBIT K**, consisting of _____ pages, referred to in and part of the **Agreement between Owner and Engineer for Professional Services** dated _____, _____.

AMENDMENT TO OWNER-ENGINEER AGREEMENT
Amendment No. _____

1. Background Data:

   a. Effective Date of Owner-Engineer Agreement: _____

   b. Owner: _____

   c. Engineer: Lamp, Rynearson & Associates, Inc. **dba Larkin Lamp Rynearson**

   d. Project: _____

~~2.~~**1.** Description of Modifications:

[NOTE TO USER: Include the following paragraphs that are appropriate and delete those not applicable to this amendment. Refer to paragraph numbers used in the Agreement or a previous amendment for clarity with respect to the modifications to be made. Use paragraph numbers in this document for ease of reference herein and in future correspondence or amendments.]

a. Engineer shall perform or furnish the following Additional Services:

b. The Scope of Services currently authorized to be performed by Engineer in accordance with the Agreement and previous amendments, if any, is modified as follows:

c. The responsibilities of Owner are modified as follows:

d. For the Additional Services or the modifications to services set forth above, Owner shall pay Engineer the following additional or modified compensation:

e. The schedule for rendering services is modified as follows:

f. Other portions of the Agreement (including previous amendments, if any) are modified as follows:

[List other Attachments, if any]

3. Agreement Summary (Reference only)

a.	Original Agreement amount:	$_____
b.	Net change for prior amendments:	$_____
c.	This amendment amount:	$_____
d.	Adjusted Agreement amount:	$_____

The foregoing Agreement Summary is for reference only and does not alter the terms of the Agreement, including those set forth in Exhibit C.

Copyright © 2008 National Society of Professional Engineers for EJCDC. All rights reserved.

Owner and Engineer hereby agree to modify the above-referenced Agreement as set forth in this Amendment. All provisions of the Agreement not modified by this or previous Amendments remain in effect. The Effective Date of this Amendment is _____.

OWNER:	ENGINEER:
City of Peculiar, Missouri	Lamp, Rynearson & Associates, Inc. **dba Larkin Lamp Rynearson**
_____	_____
By: _____	By: _____
Title: _____	Title: _____
Date Signed: _____	Date Signed: _____

Copyright © 2008 National Society of Professional Engineers for EJCDC. All rights reserved.

City of Peculiar Missouri				
Opinion of Probable Costs				
CIP Water Main Improvement and MDOT Route C Sidewalk Improvement				
July, 2014				
Sidewalk:				
1. Sidewalk- City Hall to W. Broadway (west side), W. Broadway (east side) up to Caseys. North St. to Legend Ln., McKernan Park (104sf repair and 485sf at Shelter)				
Water Mains:				
1. Peculiar Dr-S. Hurley St. north to S. Main St. & S. Main St. - Pec. Dr. north to E. North St.				
2. Spencer Addition – Clairmont St., Soryl Ave, and Hillcrest Dr.				
3. Harr-Grove Rd., between Elm St. (E.215th St.) and Route J.				
	Quantity	Unit	Unit Price	Total
Mobilization/Demobilization, Bonds, Traffic Control, Insurance	L.S.	L.S.	$ 35,000.00	$ 35,000.00
12-inch Class 200 PVC Waterline	4,550	L.F.	$ 60.00	$ 273,000.00
8-inch Class 200 PVC Waterline	5,400	L.F.	$ 40.00	$ 216,000.00
Locator Wire	9,950	L.F.	$ 0.30	$ 2,985.00
Connection to Existing System	15	Each	$ 3,000.00	$ 45,000.00
Fire Hydrant	17	Each	$ 3,500.00	$ 59,500.00
Peculiar Drive Crossing at Spencer St	L.S.	L.S.	$ 20,000.00	$ 20,000.00
Peculiar Drive Crossing at Main St	L.S.	L.S.	$ 20,000.00	$ 20,000.00
Main St Crossing at Peculiar Dr	L.S.	L.S.	$ 20,000.00	$ 20,000.00
12"-City Street Crossings - Open Cut and repair	4	Each	$ 7,500.00	$ 30,000.00
8"-City Street Crossings - Open Cut and repair	3	Each	$ 5,000.00	$ 15,000.00
12" - Driveway/Parking Entrance Repair	2	Each	$ 5,000.00	$ 10,000.00
8" - Driveway Repair	38	Each	$ 1,500.00	$ 57,000.00
Service Reconnections	44	Each	$ 1,000.00	$ 44,000.00
Service Relocation from back of house	37	Each	$ 1,750.00	$ 64,750.00
Abandon Existing Waterlines	10	Each	$ 1,500.00	$ 15,000.00
4" x 60" Sidewalk - Mo Rt. C	14,210	S.F.	$ 6.00	$ 85,260.00
Type A Sidewalk Ramp - Mo Rt. C	11	Ea.	$ 2,200.00	$ 24,200.00
Type B Sidewalk Ramp - Mo Rt. C	4	Ea.	$ 2,500.00	$ 10,000.00
Restoration	L.S.	L.S.	$ 37,500.00	$ 37,500.00
Construction Staking	L.S.	L.S.	$ 11,500.00	$ 11,500.00
Construction Cost				$ 1,095,695.00
Contingency	15%			$ 164,354.25
Legal and Administration	5%			$ 54,784.75
Engineering Design, Progress Meetings, Const. Document Review, and Milestone Inspections				$ 74,450.00
Survey- Set ROW & pick-up topo and utilities				$ 42,500.00
Total Estimated Project Cost				$ 1,431,784.00

LARKIN LAMP RYNEARSON

RESOLUTION 2014-41

A RESOLUTION OF THE BOARD OF ALDERMEN OF THE CITY OF PECULIAR, MISSOURI, APPROVING AND ACCEPTING THE AGREEMENT BETWEEN CITY OF PECULIAR AND LAMP, RYNEARSON & ASSOCIATES, INC DBA LARKIN LAMP RYNERSON FOR THE ENGINEERING DESIGN, ENGINEERING SURVEY, CONSTRUCTION ADMINISTRATION, AND PART-TIME CONSTRUCTION OBSERVATION OF THE CIP WATER MAINS NOS. 1, 2, & 3; AND A SIDEWALK ALONG ROUTE C FROM CITY HALL TO THE I-49 INTERCHANGE.

WHEREAS, the Board of Aldermen previously approved the issuance of the 2013 Water Revenue Bonds for water main improvements, and

WHEREAS, the District Area Engineer for MoDOT has pledged and will grant to the City $67,000 for a sidewalk improvements along C Hwy, and

WHEREAS, the water main projects have been identified in the 2014 Engineering Report prepared by Larkin and approved by the Missouri Department of Natural Resources

NOW THEREFORE, be it ordained by the Board of Aldermen of the City of Peculiar, Missouri as follows:

Section 1. The approval of the agreement with the City of Peculiar and Larkin Lamp Rynearson in the amount not to exceed of $116,950.00.

Section 2. The Mayor is authorized to execute this resolution acknowledging the Larkin Lamp Rynearson Agreement.

Section 3. *Effective Date.* The effective date of this Resolution is the 21st day of July, 2014.

BE IT REMEMBERED THE PRECEDING RESOLUTION WAS ADOPTED ON READING THIS ___ DAY OF _____, 2014, BY THE FOLLOWING VOTE:

Alderman Fines	_____	**Alderman Ray**	_____
Alderman Ford	_____	**Alderman Roberts**	_____
Alderman McCrea	_____	**Alderman Turner**	_____

Approved: **Attest:**

_____ _____

Holly J. Stark, Mayor **Nick Jacobs, City Clerk**

City Administrator
Brad Ratliff

City Clerk
Nick Jacobs

City Engineer
Carl Brooks

Business Office
Trudy Prickett

Chief of Police
Harry Gurin

City Planner
Cliff McDonald

City Attorney
Reid Holbrook

Parks Director
Nathan Musteen

Municipal Offices – 250 S. Main Street, Peculiar, MO 64078
Phone: (816)779-5212 Facsimile: (816)779-1004

To: **Board of Alderman**

From: Clifford L. McDonald

Date: **July 21, 2014**

Re: **City of Peculiar Comprehensive Plan RFQ (Request for Qualifications) Selection**

GENERAL INFORMATION

Applicant: **City Staff**

Status of Applicant: **N/A**

Requested Actions: **Review of Gould Evans RFQ Submittal for Comprehensive Plan Update**

Date of Application: **March 13, 2014**

Purpose: **See "Requested Actions" Above**

Property Location (if applicable): **N/A**

PROPOSAL

Review the attached RFQ (Request for Qualifications) submitted by Gould Evens for the update of the Citys' 2008 Comprehensive Plan. The City received three (3) submittals (Shockey Consulting, JEO Consulting and Gould Evens) for the Comprehensive Plan Request for Qualifications – Gould Evens is recommended.

PREVIOUS ACTIONS

The City of Peculiar adopted the current Comprehensive Plan on November 13, 2008. The Board of Aldermen reviewed the RFQ on March 6th, 2014 prior to advertising.

KEY ISSUES

Peculiar's Comprehensive Plan is the critical document which guides future growth and orderly development within the city. Adopted in 2008, these plans are typically reviewed and updated every five (5) years by municipalities. The update provides the opportunity to make adjustments for economic and housing growth (or lack thereof), account for significant development (E. 211th Street – I-49 intersection) and allows for the community & civic leaders to review the plan and "Buy In" to the City's vision for the future.

STAFF COMMENTS AND SUGGESTIONS

The Comprehensive Plan was adopted in November 2008, and has served the City of Peculiar well – however it is due for an update. This City Planner believes the most important document that will be developed with this update is a new "Interstate/Arterial Commercial District" (or something similar). This District must define the Exterior Finish, Signage, Landscape requirements, Pedestrian access, etc. the City will require to create the Destination Retail Center envisioned in Peculiar's Future Land Use Plan; Gould Evens has the technical expertise & experience to achieve this.

In reviewing Gould Evens RFQ submittal you should note their recent experience developing the Blue Springs Comprehensive Plan and their UDO (Unified Development Ordinance) – when I spoke to Blue Springs Community Development Director he had nothing but praise for both their process and product. Additionally, Gould Evens has performed several "Corridor" studies (435 and Shawnee Mission Parkway, 63rd Street Kansas City with 63rd Street CIP (Capital Improvement Plan) and Brush Creek Corridor Economic Development Plan for Kansas City which are similar to our new I-49 intersection requirement.

In reviewing the City's Comprehensive Plan, I recommend the following items be addressed in this update:

a. Review/Update the Future Land Use Plan (to reflect the 211th-I-49 interchange and the KCP&L Substation)
b. Review of the Transportation Plan & Street Projects (to accommodate traffic patterns to/from the interchange)
c. Review Population Trends/Projections (the housing market & construction)
d. Capital Improvement Plan – Review the existing plan, and tie projects (i.e. Water & Sanitary Sewer improvements) required for the new intersection and its commercial growth.
e. Review City Facilities – we have a new City Hall, the Police Department is expanding and now has a separate secure storage facility; Public Works still needs a new home.
f. Envision Peculiar – How do our residents wish the City to develop and grow in the next 20 years to become the community they want to live in? This was developed in 2008 (extensive input received) however it needs to be revisited and achieve "Buy In" again from both Citizens and the Board.
g. Develop a new Zoning District, "Interstate/Arterial Commercial District" (or similar) to specifically address development & zoning requirements at the E. 211th Street & I-49 Interchange. The Future Land Use Plan refers to "Destination Retail" and "Employment Center" in this area; however the current Zoning Regulations do not address specifics for Exterior Finish, Landscaping, etc. for these.
h. Lastly, the Comprehensive Plan Update should incorporate three (3) studies currently being performed for the City, they are:
    1. Downtown Marketing Plan
    2. E. 211th Street – I-49 Interchange Marketing Plan
    3. Economic Analysis

STAFF RECOMMENDATION

Staff Recommends pursuing items identified in paragraphs "a" thru "h" above with this Comprehensive Plan Update and negotiating a Contract with Gould Evens which shall be presented to the Board for approval.

ATTACHMENTS

RFQ (Request for Qualifications) Submittal by Gould Evens to perform the Comprehensive Plan Update.

STAFF CONTACT: Clifford McDonald,
Phone: 779-2226,
E-Mail: cmcdonald@cityofpeculiar.com

CITY OF PECULIAR, MO COMPREHENSIVE PLAN

REQUEST FOR QUALIFICATIONS

JUNE 6, 2014

gouldevans

Date: June 6, 2014

To: City of Peculiar
Attn: Clifford L. McDonald, City Planner
250 South Main Street
Peculiar, MO 64078

Re: **Peculiar, Missouri Comprehensive Plan Update**

Dear Mr. McDonald,

Gould Evans is pleased to submit our proposal to provide planning and design services to the City of Peculiar. Gould Evans has made its home in the Kansas City metropolitan area for more than 30 years. We have worked with many communities throughout the Kansas City area and the Midwest, and through our community outreach and project experience we have established lasting relationships with those communities. We are very excited about the opportunity to work with the community and stakeholders, and believe that our skills and approach will best benefit this important project.

The Gould Evans Urban Planning Studio is a dynamic, multidisciplinary group of professional planners committed to exceptional planning and design, successful project implementation and outstanding client service. Our studio mission is: To create great places that endure. To support our mission and help our client-partners achieve their vision, we value:

- Collaborative, multidisciplinary approaches that lend a variety of perspectives and professional expertise to the most challenging community development issues.
- Our project partners and community stakeholders who provide critical insights that lead to action-oriented steps.
- Comprehensive and long-range perspectives, and the power of leveraging incremental decisions into significant change.

In addition to nationally certified planners, we represent 4 additional professions among the individuals of our studio, including urban design, landscape architecture, architecture, and an attorney specializing in planning law and development regulations. We all collaborate daily on community development issues adding diversity to our perspectives, encouraging critical thinking, and avoiding formulaic responses to our professions pressing challenges. Perhaps most important is our studio's commitment to the public sector. Our team brings a wealth of city experience including the past experience of a municipal attorney, public sector planners, and member of a city tree board. We understand the needs of the City, not only from our professional training and large portfolio of public sector projects, but from years of public sector experience.

Our studio's niche within a full-service architecture firm lends a wealth of supplemental resources to all of our clients. To supplement our planning experience, Gould Evans has teamed with consultants that share our philosophy and passion for building strong and enduring communities, including Wilson and Company for transportation planning, civil engineering, utility and environemental planning. Together, we offer qualifications and experience to address all aspects of this project.

These specialized disciplines working together as a cohesive unit, enable our team to provide all necessary services for the Comprehensive Plan Update. We are confident that this team can deliver outstanding service on every aspect of this project – and beyond.

Our planning studio has a deep understanding the pressing issues facing Peculiar. Demographic changes, economic development projections, the new I-49 corridor designation and infrastructure performance and return-on-investments are all significant issues on the minds of most communities, and recent changes have significantly impacted the way we plan and engage our constituencies. These changes belie a simple baseline trends analysis and projections. As the City of Peculiar verifies the community vision against new market and demographic dynamics, and as you review the goals, objectives and policies of the 2008 plan, it is important that stakeholders understand the implication of these recent changes. The relevant projects we have included in our qualifications demonstrate how our approach to planning and our approach to public engagement has addressed these issues. Ultimately we believe that a long range plan needs to be rooted in the types of places you want to build, and then prepare the community with a resilient and sound strategy to get you there regardless of where trends may take us.

Our accompanying qualifications provide an overview of our team, including an introduction to key personnel and selected experience. It would be our pleasure and privilege to work with the City of Peculiar on this exciting endeavor.

Best regards,

Graham Smith
Associate Vice President, Project Manager
4041 Mill Street
Kansas City, MO 64111
816.701.5315
graham.smith@gouldevans.com

FIRM PROFILE 6

PROJECT TEAM 11

RELEVANT PROJECTS 18

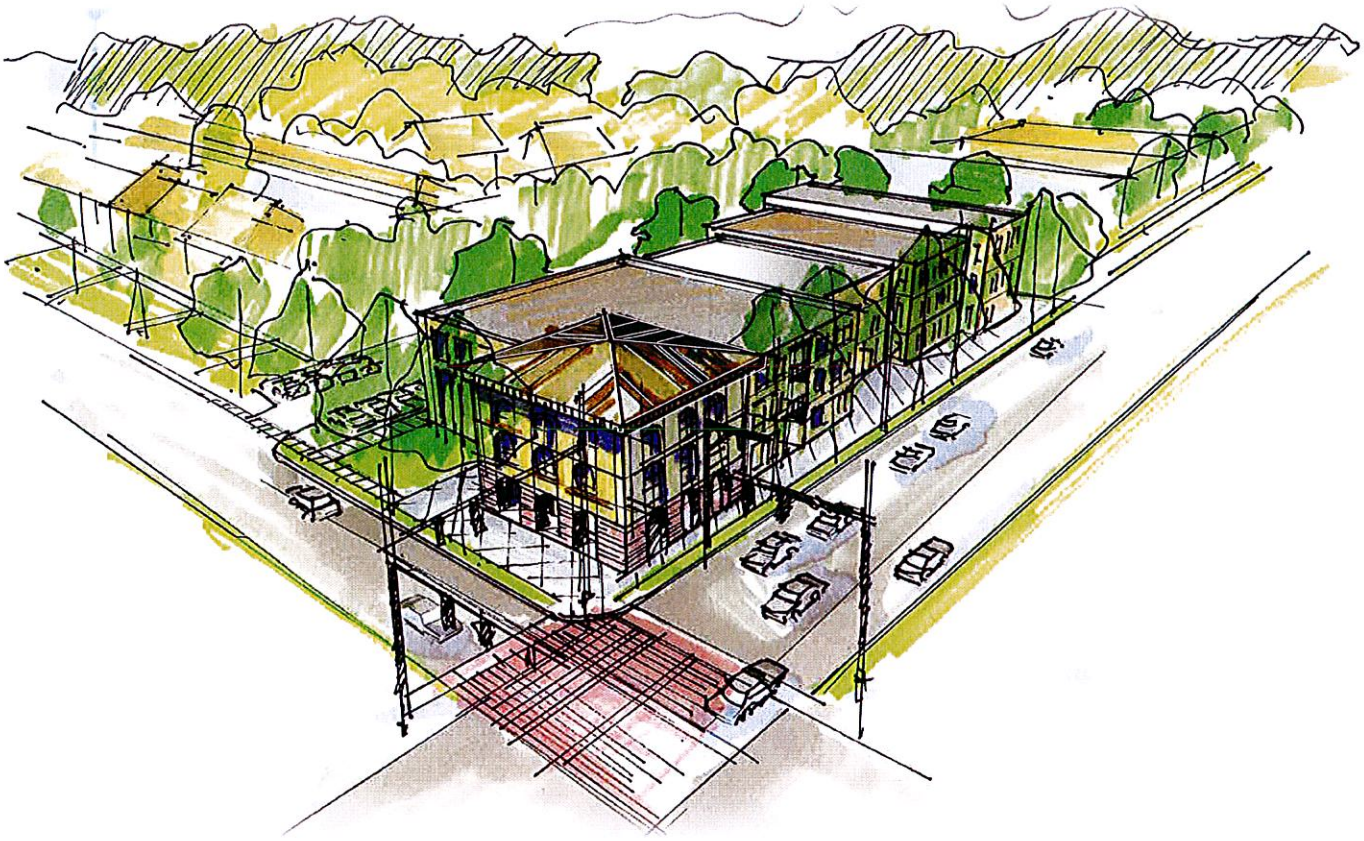

OUR VISION IS TO CREATE GREAT PLACES THAT ENDURE.

WE VALUE collaborative, multidisciplinary approaches that lend a variety of perspectives and professional expertise to the most challenging community development issues. We believe communities are best prepared to steward long-term collective goals when they consider a wide range of possibilities for the future. We support these possibilities through well-researched analysis that leads to pragmatic outcomes.

WE VALUE our project partners and community stakeholders who provide critical insights that lead to action-oriented steps. We believe that design and planning strategies, no matter how innovative and stylish, must be economically and politically sound to be successful. We do not champion theories or trends that contradict realities and characteristics of a particular community or initiative.

WE VALUE comprehensive and long-range perspectives, and the power of leveraging incremental decisions into significant change. We believe that sustainable community development starts with the region and ends at a site or building; it is not just about what is new and exciting, but more about what is time-tested and resilient. We recognize that the success of a community is measured by generations and not just by a single initiative or project.

WE RECOGNIZE THAT THE SUCCESS OF A COMMUNITY IS MEASURED BY GENERATIONS AND NOT JUST BY A SINGLE INITIATIVE OR PROJECT.

WE ADVOCATE:

- Ownership – A bold vision requires people who care enough to be there every day.
- Education – Commitment by the community translates a vision into actions.
- Innovation – Research converts progressive ideas into strategies.
- Integration – Comprehensive perspectives organize complex systems into great communities.
- Implementation – Pragmatic courses of action create your legacy.

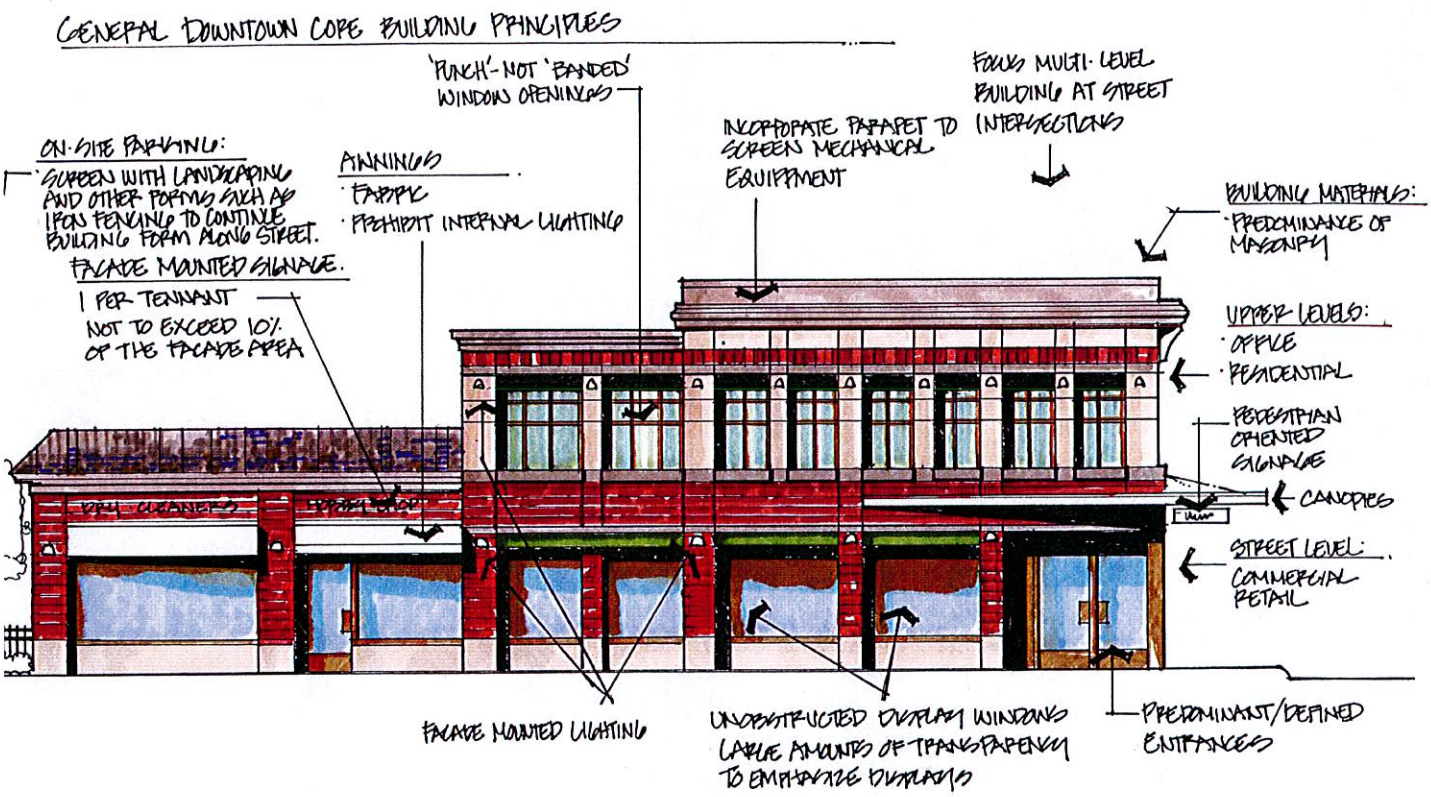

The Gould Evans Urban Planning and Design Studio is comprised of a multidisciplinary team of professionals with deep municipal experience, including certified planners, landscape architects, urban designers, and an attorney specializing in development regulations. We focus on three interrelated planning services that allow our clients to envision and create great places:

WE PLAN. We understand the complexities of the development process, and in particular how comprehensive planning can best guide complex, incremental decisions towards a greater community vision.

WE DESIGN. We understand that urban design is the glue that holds a community together, and that through effective urban design policies, a multitude of individual projects and sites over time can add up to a larger and greater whole.

WE IMPLEMENT. We understand that Development Regulations are not just a collection of standards, but are a tool to implement a logical, long-range plan for the physical form and urban design principles that will define your community for generations.

We translate community vision and values into workable plans, urban design strategies and development regulations.

Gould Evans is a design firm dedicated to using our creative powers to move the world forward. Our firm culture is built on using the design process to solve problems and improve our client's competitive edge. We reward thought leadership that aims high – from high performance buildings to high performance cities.

To complement our services, the Urban Planning and Design Studio also offers the support of a leading full – service architecture firm providing building design, landscape architecture, environmental graphics, interior design, marketing communications, and construction management services. We also have strategic and long-standing relationships with allied professionals that share our philosophy and passion for building strong and enduring communities, including transportation, economic development, and engineering specialists.

WILSON & COMPANY

Founded in 1932, Wilson & Company is a planning, engineering, architecture, surveying, mapping, and environmental firm employing staff throughout 20 offices in 13 states. Our staff of over 450 professionals includes civil, mechanical, electrical and structural engineers; planners; architects; biologists; surveyors; mappers; GIS specialists; construction managers; and inspectors. We provide services to federal and municipal governments, public transportation agencies, railroad companies, industrial and commercial corporations, private developers, institutional, primary and secondary education, healthcare, and energy companies. The cornerstone of our success is Higher Relationships, standards in Shared Ownership; Collaboration; Intensity, Discipline and Solutions.

Our professional staff resources enable us to assemble strong, project specific teams to address the exact needs of a given client and project. Locally, regionally and nationally, Wilson & Company has successfully led numerous transportation planning and capital improvement studies as well as comprehensive planning studies with transportation and engineering components.

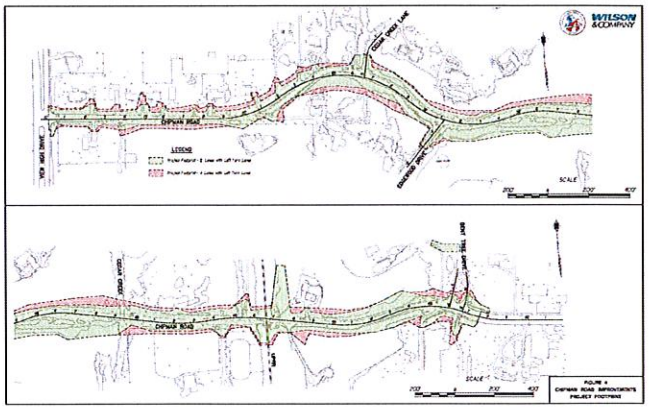

CITY OF PECULIAR, MO

Board of Aldermen
Planning Commission
Planning and Zoning Staff
City Staff
Stakeholders
Residents, Business owners, Property owners

GOULD EVANS
Visioning, planning, urban design, zoning and implementation

PROJECT MANAGER
Graham Smith, AICP
816.701.5315
Graham.smith@gouldevans.com

PLANNER / REGULATIONS / IMPLEMENTATION
Chris Brewster, AICP, JD

LANDSCAPE ARCHITECT
Robert Whitman, ASLA, AICP, LEED AP

URBAN DESIGNER
Ryan McCabe

WILSON & COMPANY
Transportation & environmental planning, civil / utility engineering

TRANSPORTATION PLANNER
Vanessa Spartan, AICP

CIVIL / UTILITY ENGINEER
Justin Klaudt, PE

ENVIRONMENTAL PLANNER
Douglas Dreiling, LRC

GRAHAM SMITH, AICP
PROJECT MANAGER

FIRM
Gould Evans

EDUCATION
Bachelor of Science in Geography,
Master of Regional & Community Planning;
Kansas State University

REGISTRATION
American Institute of Certified Planners

INVOLVEMENT
American Planning Association
Urban Land Institute

CONTACT
816.701.5315
graham.smith@gouldevans.com

Graham, as the Associate Vice President of the Urban Planning and Design Studio of Gould Evans, focuses on providing policy and urban design guidance to communities and clients. Through the preparation of community, area, neighborhood, corridor, special project plans, design guidelines and regulations, Graham provides the clients he engages with visionary, implementable plans for the future. A significant portion of Graham's work has emphasized infill and redevelopment strategies within urban settings to create and reinvigorate places for people. One constant among Graham's projects has been the innovative and involved stakeholder engagement. From defining the vision to carrying out implementation actions, the stakeholders in any process are the key to success. With extensive professional planning experience in both the public and private sectors, Graham brings a unique perspective to projects. Prior to joining Gould Evans, he worked in the long-range planning division of the Planning and Development Department for the City of Kansas City, Missouri.

RELEVANT EXPERIENCE

- Comprehensive Plan & UDO Update, Blue Springs, MO
- Comprehensive Plan, Sedalia, MO
- Comprehensive Plan, Salina, KS
- Waukee Comprehensive Plan, Waukee, IA
- Midtown / Plaza Area Plan, Kansas City, MO
- Commercial Villages Master Plans, Development Regulations & Design Guidelines, Mountain Brook, AL
- Arena Neighborhood Plan, Wichita, KS
- Downtown Neighborhoods Master Plan, Kansas City, KS
- Downtown / North Leavenworth Neighborhood Plan, Leavenworth, KS
- NW 86th Street Corridor Plan, Clive, IA
- 435 and Shawnee Mission Parkway Corridor Plan, Shawnee, KS
- 63rd Street Corridor, Kansas City, MO
- Maguire Street Corridor Study, Warrensburg, MO
- 63rd Street CIP Plan, Kansas City, MO (Southtown Council)
- Brush Creek Corridor Economic Development Plan, Kansas City, MO
- State Avenue Transit Improvement Plan, Wyandotte County, Kansas City, KS

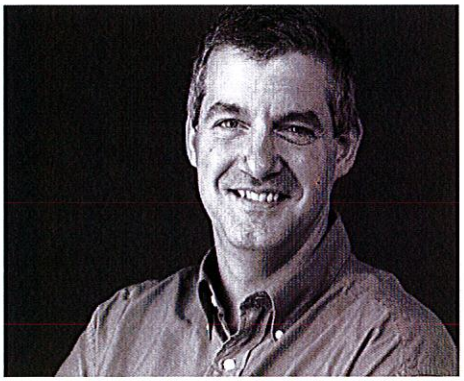

CHRIS BREWSTER, AICP, JD
PLANNER / / REGULATIONS IMPLEMENTATION

FIRM
Gould Evans

EDUCATION
JD University of Missouri-Kansas City;
BS Business Administration / Marketing, University of Delaware

REGISTRATION
American Institute of Certified Planners
Missouri Bar

INVOLVEMENT
American Planning Association
LEED ND Corresponding Committee
UMKC Adjunct Faculty, Planning Law
MO APA County Statues Committee
contributing author
Legal Guide to urban and sustainable development for Planners, Developers, and Architects, John Wiley and Sons, 2008

CONTACT
816.701.5655
chris.brewster@gouldevans.com

Chris specializes in integrating physical planning policies, urban design principles and form-based development strategies into development regulations and capital improvement policies. As a planner and an attorney Chris provides a creative approach to planning, development and urban design issues that need legal and technical solutions. Since joining Gould Evans in 2001, he has worked on all scales of planning and urban design issues, from regional and comprehensive plans focusing on policy, to neighborhood and street scale plans that focus on design and implementation. Chris has managed several development regulation, design guideline and implementation projects for municipal clients, many of which have been recognized for awards and excellence among planning peers. Before joining the firm, Chris served as the Assistant City Attorney for the City of Lee's Summit, Missouri, and previously worked for Johnson County (KS) Transit.

RELEVANT EXPERIENCE

- Comprehensive Plan & UDO Update, Blue Springs, MO
- Waukee Comprehensive Plan, Waukee, IA
- Model Sustainable Development Code and Code Audits, Mid American Regional Council, Kansas City, MO
- Unified Development Code and Comprehensive Plan, Blue Springs, MO
- Sign Ordinance, North Kansas City, MO
- Midtown / Plaza Area Plan, Kansas City, Missouri
- Unified Development Ordinance Sustainability Audit, Lenexa, KS
- Unified Development Code / Form-Based Code, Cheyenne, WY
- Burlington Corridor Overlay Ordinance & Design Guidelines, North Kansas City, MO
- State Avenue Transit Improvement Plan, Wyandotte County, Kansas City, KS
- Commercial Villages Master Plans, Development Regulations & Design Guidelines, Mountain Brook, AL
- Hwy 5 / North River Area Sustainability Plan, Des Moines, IA
- Subdivision Regulations, Shelby County, AL (APA Alabama Award, 2008)
- General Development Code, Cuyahoga Falls, OH (NE Ohio Smart Growth Award, 2005)
- Comprehensive Plan, Subdivision Regulations and Zoning Ordinance, Fairhope, AL (APA Alabama Outstanding Planning Awards, 2001 and 2004)
- Comprehensive Plan, Subdivision Regulations & Zoning Ordinance, Hastings, NE

ROBERT WHITMAN, ASLA, AICP
LANDSCAPE ARCHITECT / PLANNER

FIRM
Gould Evans

EDUCATION
Bachelor of Landscape Architecture;
Minor in Community and Regional Planning;
Certificate in Land Use Planning;
Kansas State University

REGISTRATION
Licensed Landscape Architect
Certified Planner
LEED Accredited Professional

INVOLVEMENT
American Society of Landscape Architects
American Institute of Certified Planners
Empire Estates Homes Association,
President, 2000-present
Legacy of Greenery Committee, City of
Overland Park Tree Board, 2002-2008
Community Advisory Committee for Vision
Metcalf, City of Overland Park
Steering Committee,
Heartland Tree Alliance, 2012

CONTACT
robert.whitman@gouldevans.com

Robert has considerable experience in site development, landscape architecture, urban design and community planning projects. For the last 16 years he has worked with several institutional clients to plan and design community spaces, such as playgrounds, arboretums, gardens, and parks, trails and open space. Robert is an expert on regional plant materials having developed a catalogue of plant material, growing criteria and other pertinent information. For several years, he has worked with the City of Overland Park and community volunteers to inventory street trees and develop strategies for preserving the city's green space legacy. Robert frequently shares his design and horticultural expertise as a speaker or panel member at regional events. He also consults with communities on their street tree programs and similar endeavors.

RELEVANT EXPERIENCE

- Comprehensive Plan & UDO Update; Blue Springs, MO
- Overland Park Arboretum and Botanical Gardens Master Plan Welcoming Garden, Iris Garden and Train Garden; Overland Park Arboretum and Botanical Gardens; Overland Park, KS
- Kansas City Sculpture Garden at the Nelson-Atkins Museum of Art; Kansas City, MO
- Nelson-Atkins Museum of Art Bloch Building Site Development; Kansas City, MO
- Liberty Memorial Improvements, Penn Valley Park; Kansas City, MO
- Riverfront Heritage Trail; Kansas City, MO
- Citywide Park Standards; Cheyenne, WY
- Soccer Fields, Metropolitan Community College - Blue River; Independence, MO
- Shoal Creek Valley Neighborhood Recreation Center; Kansas City, MO
- Adam's Pointte Golf Club; Blue Springs, MO
- Westminster Promenade; Westminster, CO
- Independence Boulevard Streetscape Improvements; Kansas City, MO
- Campus Master Planning (Including Trails and Arboretum); Courtyard; and Japanese Garden Concept Design, Johnson County Community College; Overland Park, KS
- Neighborhood Parks and Playgrounds; Whiteman Air Force Base, MO; Seymour Johnson Air Force Base, NC; Dyess Air Force Base, TX

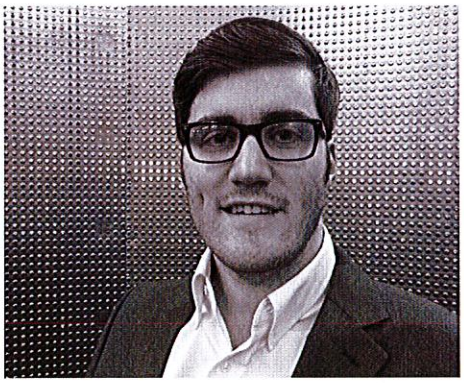

RYAN MCCABE
URBAN DESIGNER

FIRM
Gould Evans

EDUCATION
Master of Architecture; University of Kansas

CONTACT
ryan.mccabe@gouldevans.com

Ryan's architectural experience includes master planning, site planning and design, schematic design, and building / structural systems. He has participated in a broad range of projects encompassing renovation and expansion of existing facilities, as well as new construction and master planning. Ryan has developed a particular expertise in producing graphics to convey planning, urban design and regulatory concepts, and is proficient with a wide variety of graphic and mapping programs.

RELEVANT EXPERIENCE

- Comprehensive Plan & UDO Update, Blue Springs, MO
- Midtown / Plaza Area Plan, Kansas City, MO
- Maguire Street Corridor Study, Warrensburg, MO
- Comprehensive Plan, Blue Springs, MO
- On-Call Planning Services, North Kansas City, MO
- Campus Master Plan, Missouri University of Science & Technology, Rolla, MO

VANESSA SPARTAN, AICP
TRANSPORTATION PLANNER

FIRM
Wilson & Company

EDUCATION
BA, Urban Planning and Design, Minor – Environmental Science, University of Missouri-Kansas City
Urban Planning Coursework, Columbia University

REGISTRATION
American Institute of Certified Planners

INVOLVEMENT
American Planning Association (Chapter Membership: Kansas, Missouri, Oklahoma), UMKC Arts & Sciences Alumni Board

Vanessa holds a Bachelor of Arts in urban planning and design, with a minor in environmental science from the University of Missouri-Kansas City and completed coursework at Columbia University in the Graduate School of Architecture, Planning and Preservation. Vanessa Spartan is a senior planner at Wilson & Company specializing in program research and long-range planning to establish and develop a community vision. Her experience includes community planning, urban design, environmental planning, multimodal transportation planning, graphic design, public outreach, marketing, and GIS analysis. Vanessa's experience has spanned 24 states, and has touched all levels of government including projects for city, county, metropolitan, tribal, state, and federal government agencies.

Vanessa is American Institute of Certified Planners (AICP) certified, a member of the American Planning Association (APA), the Member-at-Large Representative for the Kansas City Chapter of APA, and a UMKC Arts & Sciences Alumni Board member. Additionally, Vanessa has taught several courses as an adjunct faculty member of UMKC's Department of Architecture, Urban Planning and Design. In 2014 Vanessa was recognized by her alma matter as the 2014 UMKC Architecture Urban Planning and Design Alumni Honoree.

RELEVANT EXPERIENCE

- City of Blue Springs Comprehensive Plan, Blue Springs, MO
- City of Hutchinson, Bicycle & Pedestrian Master Plan, Hutchinson, KS
- City of Hutchinson, Main Street (7th to 30th) Concept Plan, Hutchinson, KS
- Midtown / Plaza Area Plan, Kansas City, MO
- City of Sterling & KDOT, Sterling Core Connections, Sterling, KS
- City of Ottawa & KDOT, Connecting Ottawa, Ottawa, KS
- Maricopa Association of Governments (MAG), Designing Transit Accessible Communities, Maricopa County, AZ
- ADOT, Coolidge Transportation Feasibility Study, Coolidge, AZ
- On-Call Planning Services, North Kansas City, MO*
- 63rd Street Capital Improvements Plan, Kansas City, MO*
- State Avenue Corridor Transit Improvements, Kansas City, KS*
- Downtown / North Leavenworth Redevelopment Area Plan, Leavenworth, KS*
- Parvin Road Land Use Study, Kansas City, MO*
- I-435 Area Land Use Study, Shawnee, KS*
- River Drive Corridor Concept Plan, Moline, IL*

* Work with previous firm

JUSTIN KLAUDT, PE
CIVIL / UTILITY ENGINEER

FIRM
Wilson & Company

EDUCATION
BS, Civil Engineering, Kansas State University

REGISTRATION
Professional Engineer Kansas #17235 (2002), Missouri #2004026503 (2004), Arizona #49273 (2009), Nebraska #E-13197 (2010), Oklahoma #24370 (2010)
Certified LPA IIAC Construction Inspector, Kansas #1710
MoDOT Local Agencies Basic Training, Level I (May 2012)

INVOLVEMENT
Engineer's Club of Kansas City; Kansas Society of Professional Engineers

Justin joined Wilson & Company's Civil Engineering Division in 1998. His proficiency is in general civil engineering and utility coordination services. He has been involved in various projects for municipal, county, state and federal clients. Justin has served as Project Manager, Project Engineer, or Design Engineer on many projects including sanitary sewer main extensions, water main extensions, drainage improvements, site development projects, street and highway improvements, new street designs, and federally funded street improvements. Also, with experience as a construction observer, he is able to lend a unique insight during the design phase of the project in order to meet the desired goals.

Justin is currently working with the City of Belton's Public Works Department and serves as the project manager for the 155th Street Project.

RELEVANT EXPERIENCE

- Phase IV Walking Trail, Bonner Springs, KS
- Holmes Road Sidewalk Improvements, Kansas City, MO
- 2010, 2011, and 2012 Sidewalk Improvements, Leavenworth, KS
- Chipman Road Improvements, Lee's Summit, MO
- 31st Street Improvements Study & 31st Street Improvements, Lawrence, KS
- Muncie Road Improvements (4th Street to Hughes Road), Leavenworth, KS
- East Pearl Street Preliminary Engineering Study & East Pearl Street Rehabilitation, Harrisonville, MO
- Parvin Road Alignment Study, Kansas City, MO
- Broadway Bridge Replacement, Miami County, MO
- Monticello Road Improvements, Lenexa, MO

DOUGLAS DREILING, LRC
ENVIRONMENTAL PLANNER

FIRM
Wilson & Company

EDUCATION
M.S., Geology, Fort Hays State University
B.S., Geology, Fort Hays State University

REGISTRATION
Licensed Remediation Consultant #1777, Oklahoma Corporation Commission
Certified Risk Assessor – State of Kansas

INVOLVEMENT
Society of American Military Engineers (SAME) - Greater Kansas City Post (Sustaining Membership Chairman from 2008 – 2012)
Mobil Oil Corporation – Total Quality Management Program Graduate
Southern California Demming Total Quality Management Alliance
San Diego County, California – Environmental Technical Work Group
United States Environmental Protection Agency – Publication for Innovative Remedial Techniques
Institute of Brownfield Professionals

Mr. Dreiling has served public- and private-sector clients as an environmental consultant for 25 years. His technical responsibilities include project and program management, developing and implementing consulting strategies, quality assurance / quality control and loss prevention review, regulatory negotiations, and public relations. His technical specialty is urban redevelopment of environmentally-impaired properties (Brownfields). This includes overall responsibility for environmental due-diligence, assessment, and remedial actions for numerous large urban redevelopment districts. Over his career, he has assessed and remediated over 700 contaminated properties addressing a wide range of regulated substances.

RELEVANT EXPERIENCE

- H&R Block Center, Downtown Power & Light District, Kansas City, MO
- MAPS3 Downtown Urban Park Project, Oklahoma City, OK
- Downtown Sprint Center Arena, Kansas City, MO
- EPA Brownfields Program, Oklahoma City, OK
- EPA Brownfields Program, McKinney, TX
- EPA Brownfields Program, Wheat Ridge, CO
- Downtown Power & Light Entertainment District, Kansas City, MO
- 18th & Vine Street Urban Redevelopment District (URD), Kansas City, MO
- "Vision Metcalf" Area-wide Urban Planning Study, Overland Park, KS
- Heritage Court Redevelopment Project, Leavenworth, KS
- Dry Cleaning Trust Fund Program, State of Kansas, 1997-1998*
- State Water Plan Contamination Remediation Program, State of Kansas, 1998-2000*
- Demolition of Former Veterans Affairs Hospital Building, Excelsior Springs, MO*
- Main Entry Gate Project – Offutt Air Force Base (AFB), Belleview, NE*
- Hurricane Sandy Disaster Response Services – New York City Health & Hospitals Corporation, New York City, NY*

* Work with previous firm

The following projects were performed by the Gould Evans Planning and Urban Design Studio over the past 10 years. Most projects apply the studio's interdisciplinary philosophy and approach of planning, design guidelines and development regulations.

PLANNING

- Blue Springs, MO – Comprehensive Plan
- Des Moines, IA – North River Area Development Plan
- North Kansas City, MO – On-call Planning Services
- Salina, KS – Comprehensive Plan
- Shawnee, KS – Shawnee Mission Parkway / I-435 Corridor Study
- Hastings, NE – Comprehensive Plan
- Augusta, KS – Westward Expansion Plan
- Sioux City, IA – Comprehensive Plan
- Overland Park, KS – Downtown Master Plan and Design Guidelines
- Sedalia, MO – Comprehensive Plan
- Waukee, IA – Comprehensive Plan
- Roeland Park, KS – Comprehensive Plan

URBAN DESIGN

- Leavenworth, KS – Downtown / North Neighborhood Redevelopment Plan
- Webster Groves, MO – Development Foundation Plan
- St. Charles, MO – Riverfront Design Plan
- Fairhope, AL – Downtown Streetscape Improvement Plan
- Clive, IA - NW 86th Street Corridor Plan
- Green Bay, WI – Downtown Design Plan
- Wichita, KS – Downtown Arena Neighborhood Plan
- Raytown, MO – CBD Master Redevelopment Plan
- Kansas City, KS – Downtown Master Plan
- Helena, AR – Downtown Master Development Plan
- Kansas City, MO – 63rd Street Corridor Master Plan
- Lawrence, KS – Downtown Design and Development Plan
- Clive, IA – Northwest 86th Street Corridor Plan
- Roeland Park, Westwood, and Kansas City, KS – 47th and Mission Corridor Plan and Design Guidelines
  Mason City, IA – Willow Creek Master Plan

DEVELOPMENT REGULATIONS

- Blue Springs, MO – Unified Development Code
- Mid-America Regional Council (Kansas City MPO) – Sustainable Development Code Framework and Community Code Audits
- North Kansas City, MO – Burlington Corridor Design Guidelines and Overlay Ordinance
- Cheyenne, WY – Unified Development Code & Form Based Code
- Salina, KS – Interim Growth and Development Standards
- Lenexa, KS – Unified Development Ordinance Sustainability Audit
- Hastings, NE – Zoning Ordinance and Subdivision Regulations
- North Kansas City, MO – Sign Code
- Cuyahoga Falls, OH – Development Code
- Mountain Brook, AL – Commercial Villages Master Plans, Zoning Overlay and Design Guidelines
- Shelby County, AL – Subdivision Regulations
- Webster Groves, MO – Commercial and Urban Residential Zoning Regulations and Design Guidelines
- Fairhope, AL – Zoning Ordinance and Subdivision Regulations
- Boerne, TX – Zoning Ordinance and Subdivision Regulations
- Maize, KS – Zoning Ordinance, Subdivision Regulations and Design Guidelines
- Fairway, KS – Zoning Ordinance
- Red Oak, IA – Zoning Ordinance and Subdivision Regulations

OUR APPROACH TO COMPREHENSIVE PLANNING

A plan is nothing without a Vision. A clear long-range vision establishes a benchmark against which all issues, goals and opportunities can be measured.

WE UNDERSTAND the complexities of the development process, and in particular how comprehensive planning can best guide complex, incremental decisions towards a greater community vision. More importantly we understand them from the local government's perspective. Our approach is proven successful in minimizing the complexities and identifying a path to meeting the specific long-range needs and goals of the community.

WE ADVOCATE tthe following *Comprehensive Planning Principles* to meet the expectations for a clear path to a long-range vision:

- **Where do we grow?** - Develop regionally significant policies towards growth and development.
- **What do we grow?** - Identify the types and location of places you envision.
- **How do we grow?** – Identify a context-based and comprehensive implementation program through:
    - Land use policies that reflect the scale and relationships necessary to create great places;
    - Road networks and street designs to connect and support those places;
    - Urban design strategies that define the unique characteristics of your community;
    - Capital programming that coordinates private actions with strategic public investment; and
    - Regulations specific to the scale, context, and types of places you envision.

Too often conventional planning approaches ignore what is necessary for a community to create great places. Conventional approaches may quickly translate broad policies to a future land use map, and simply convert this map to zoning districts. Meanwhile the issues and layers of analysis regarding the context, the scale of development, and the urban design and development patterns essential to the types of places you envision are left unexplored. Ultimately the details of how a city works, how the development community reacts, and how unique and great places get built are ignored.

In contrast, we help communities explore these complexities – the Where, What and How of future growth and development. We connect these issues from the regional scale, to the neighborhood/district scale, and to the site scale to ensure integrated and consistent development policies.

- Rather than determining future land use at the scale of a region or city, we plan for growth and structure – implementing policies that define the settlement patterns of your region.
- Rather than assume that similar land uses equate to compatibility and quality at the scale of a district, we design for context – providing guidance on the relationships necessary to build lasting value through unique and diverse places in your community.
- Rather than react and prohibit assumed impacts at the scale of a site, we regulate form, performance and use – implementing the development patterns, land use relationships and urban design features that add value to a block, a street, and a parcel.

Within this framework, communities, public officials and development professionals become better equipped to make land use, urban design, and development decisions to achieve their vision.

OUR APPROACH to public participation is about putting the right information, in the right hands, at the right time. From this point more effective community decisions and actions follow - creating great places that endure.

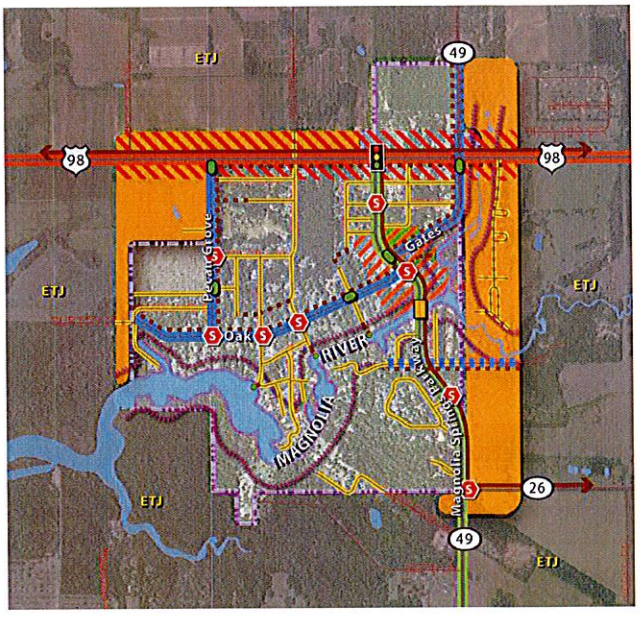

Involvement of citizens, stakeholders, staff, and public officials makes the difference between successful planning and successful implementation.

WE UNDERSTAND that the planning process must facilitate consensus on the most difficult community issues and present a realistic range of options to make informed decisions. Further, we understand that consensus is not possible on every issue. Where there is consensus, implementation may be swift and successful. But, more importantly, where there is dissent, informed consent allows differences to be understood, compromises to be achieved, and decisions to be made that continue to advance the community's long-range goals.

WE VALUE our project partners and community stakeholders who provide critical insights that lead to action-oriented steps. We believe that design and planning strategies, no matter how innovative and stylish, must be economically and politically sound to be successful. We do not champion theories or trends that contradict realities and characteristics of a particular community or initiative.

WE ADVOCATE the following ***Community Engagement Principles*** in every planning project to help facilitate community discussions on planning, urban design and development issues:

- ***Informative*** – Create a common foundation of understanding from the technical and detailed to the visionary and conceptual.
- ***Strategic*** – Build on existing networks—past success spreads accurate information quickly.
- ***Inclusive*** – Diverse perspectives are essential—a viewpoint not considered can quickly become a focal point for the most vocal and principled opposition.
- ***Prioritized*** – If the public sector must make hard decisions, participants must similarly make hard decisions.
- ***Interactive*** – Clearly define the role of the public in shaping future policy direction, then rely on the process.
- ***Cooperative*** – The engagement process must build and strengthen relationships necessary for plan implementation—long after the planning process has ended.

Too often conventional public participation processes force one preferred technique on the stakeholders, or mistakes open invitations and broad dissemination of information as a truly inclusive process. However, these approaches often backfire and can alienate the very people you need to hear from most and the people who will ultimately need to become champions for the plan.

We believe that successful public engagement strategy must be founded on what works for that community, and no two communities are alike in this regard. Rather than force an approach or process on a community, we partner with our clients to create a strategy suited for the issues at hand and the people involved. We incorporate a wide range of techniques in many different forums to ensure that not just the quantity of information, but that the quality of information leads your planning project.

OUR APPROACH to public participation is about putting the right information, in the right hands, at the right time. From this point more effective community decisions and actions follow - creating great places that endure.

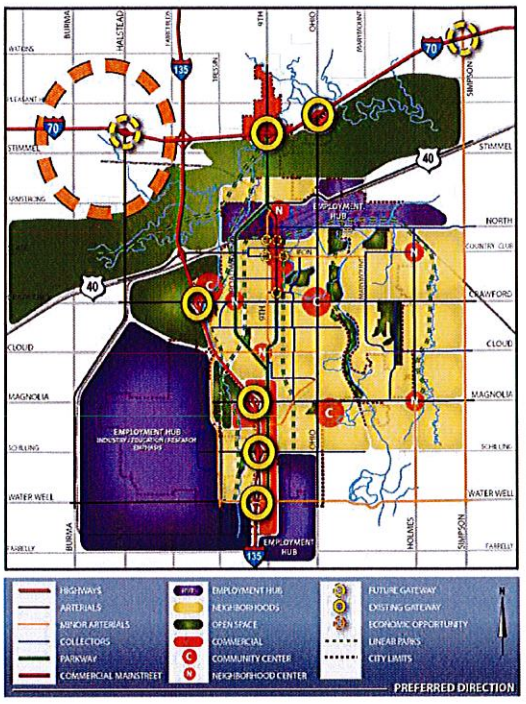

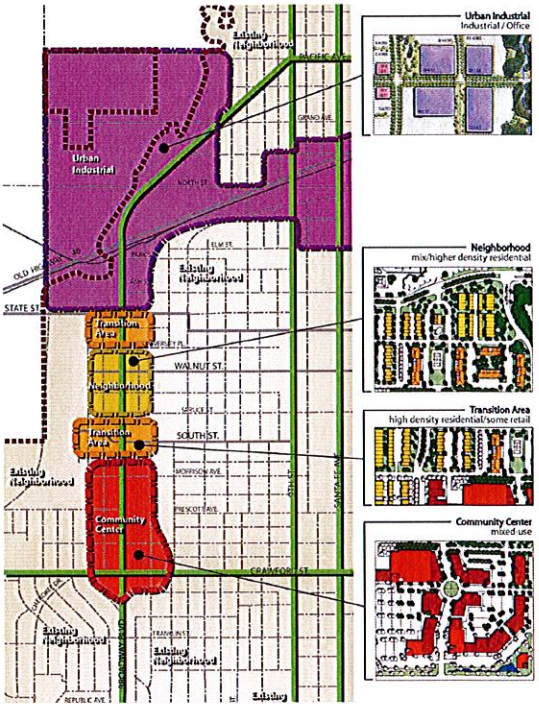

CHALLENGE

Salina, Kansas is a mid-sized regional center of 48,000 located at the intersection of two interstates serving as the economic and cultural hub for a multi-county area. It is home to several institutions, colleges and manufacturers and is poised for future growth. However, recent growth of commercial corridors, and rural growth in the unincorporated Saline County has created many planning, infrastructure, and policy issues as the City continues to build on its strong regional position. Strengthening neighborhoods, improving downtown, attracting infill and redevelopment to aging corridors, and managing transitions from rural to developed areas are all crucial to Salina's future success.

ACTION

The future of Salina is defined by a strong downtown, good jobs and industry and an eclectic selection of goods and services supported by strong neighborhoods and the people that call Salina home. The plan charts the course for implementation of the vision and ensures stakeholders in the community succeed in their efforts. The plan identified special planning areas that uniquely balanced distinct policy issues related to growth and infill development. The plan also includes a strong urban design component strengthening institutions, community centers and major identity corridors as key features of Salina as a regional destination.

RESULTS

Since the plan process began, numerous public art projects and development projects in downtown has strengthened the presence of a regional gathering places. The City has a new transit system that is expanding, connecting job centers and major institutions. The planning process involved strong inter-jurisdictional cooperation, leading to the establishment of a plan and transitional development standards for the unincorporated growth areas surrounding the City.

* with Wilson and Company

PROJECT: Compehensive Plan & Transitional Development Standards

LOCATION: Salina, KS

CLIENT REFERENCE:
Gary Hobbie, Community and Development Services Director
City of Salina
785.309.5715
gary.hobbie@salina.org

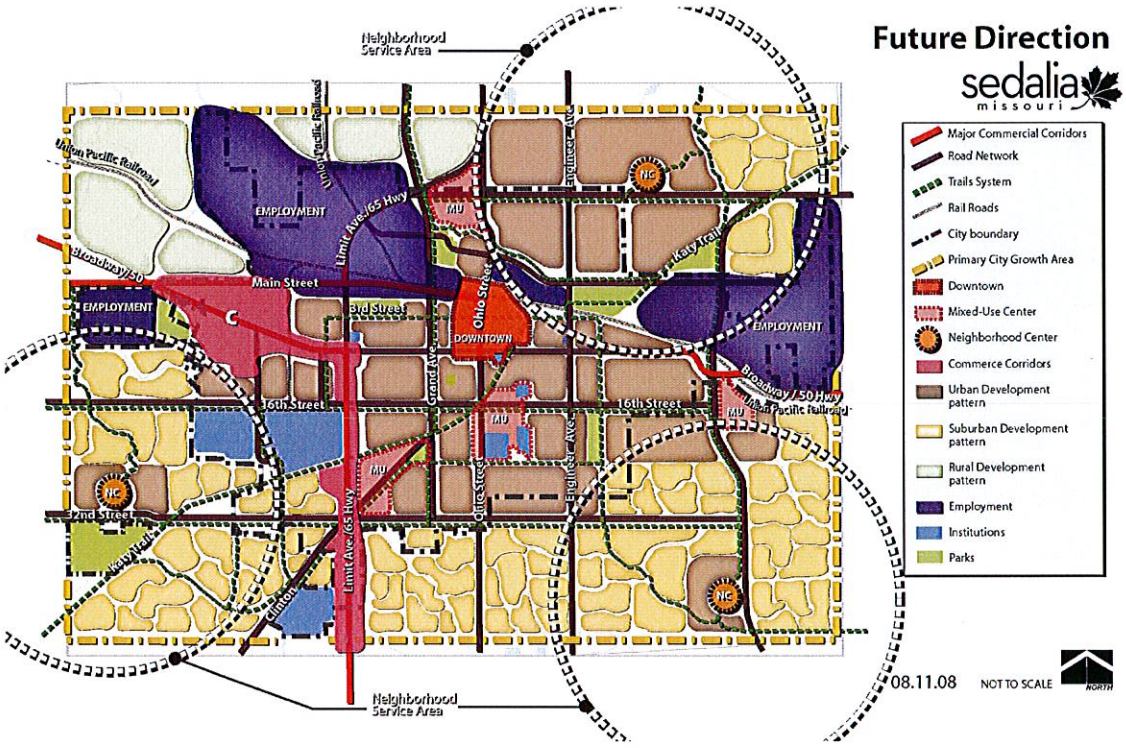

CHALLENGE

When the City of Sedalia, Missouri hired the Gould Evans planning studio to update its master plan, the intent was to create a future vision and direction for the community. Setting a framework for the development of future public policy in the areas of commercial and industrial development, land use, growth management, neighborhood aesthetics and monetary appropriations were significant project components, so the involvement of the community was essential from the onset.

ACTION

The team also created a website to reaffirm the plan's identity and extend it to a greater audience. As another communication tool for the plan, it updates the community on progress, meeting dates, documents, graphics and materials and allows for comments from the community. This serves as an extraordinary forum for extending the plan throughout the public.

RESULTS

Unique from many comprehensive plans, the Sedalia Comprehensive Plan has a section dedicated to growth management for the community. The consultant team utilized U.S. Census information to categorize areas of the community as Emerging, Conservation/Stabilization, Re-establishment, New Growth, or Urban Reserve/Agricultural areas. Categorization of each area allowed the City to determine how to strategically address growth or lack of growth throughout the community. In addition to defining current categories, the plan gave thresholds to determine when areas of the community could be changing from one growth category to another. These tools will allow the City to address infill and new development in a strategic manner that can help to stabilize the community as a whole.

PROJECT: Comprehensive Plan

LOCATION: Sedalia, MO

CLIENT REFERENCE:
John Simmons, Community Development Director
City of Sedalia
660.827.3000
jsimmons@cityofsedalia.com

CHALLENGE

The City of Blue Springs, MO is on the eastern edge of metropolitan Kansas City. The city's proximity to the metro area and a strong school district have allowed it to thrive as one of the great suburban communities in Kansas City. However, like many suburban communities the city has struggled to seize a unique identity, wrestled with declining strip and car-oriented development, and seeks to resurrect its historic downtown. Rapidly changing demographics (national trends), shifts in housing preferences, the desire for a high level or recreation amenities / healthy living, retaining and attracting jobs, and the potential for regional commuter rail are all things weighing heavily on the minds of citizens and leaders as they create development policies and regulations responsive to their context and the current situation.

ACTION

This project initiates a "planning system" with 3-scales of planning for the City of Blue Springs:

- a General Plan addressing broad, comprehensive city-wide development policies and focusing on the systems and frameworks that create distinct places in the city;
- Specific Plans addressing unique contexts and coordinating the relationships between public realm and private development patterns; and
- Development / Project Plans that enable incremental and strategic action by the public and private sector.

This system allows staff to continue to pursue on-going and proactive planning under the vision and policies of the General Plan and identifies how each increment of development contributes to the larger and greater whole.

RESULTS

The outcomes from this plan and planning system are:

- Renewed emphasis on the city's unique access to natural amenities as the organizing urban design framework for the City.
- A system of Street Types that reinforce public realm design as a key contributor to community identity and distinct places in the community.
- Reinforcing neighborhoods as the fundamental planning element of the community and exploring opportunities to strengthen or introduce the "gathering places" as a focal point of all neighborhoods.
- Integrating housing options into smaller-scale redevelopment projects.
- Identifying strategic and incremental redevelopment opportunities within aging automobile-oriented corridors.
- Improving multi-modal networks with connections off of the major corridors.
- Unified Development Ordinance updates to implement Specific Plans and Development Concepts identified in the planning process.

* with Wilson and Company

PROJECT: Comprehensive Plan & UDO Update

LOCATION: Blue Springs, MO

CLIENT REFERENCE:

Scott Allen, AICP, Community Development Director
City of Blue Springs, MO
816.228.0211
sallen@bluespringsgov.com

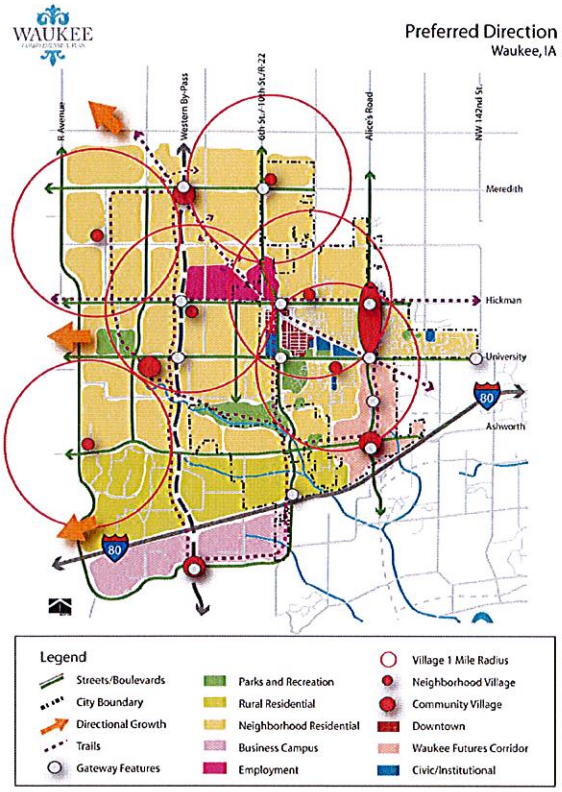

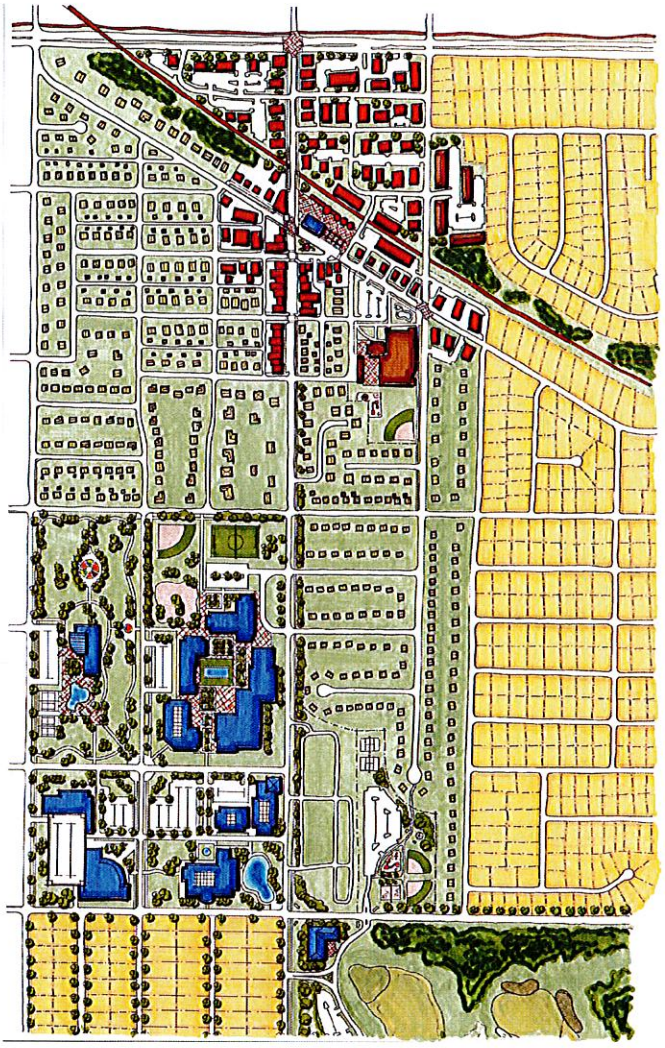

CHALLENGE

The City of Waukee, IA lies in the western fringe of the Des Moines metropolitan area. The western suburbs of the Des Moines metro have been growing rapidly for more than 20 years, making Waukee the fastest-growing city in the fastest-growing county in Iowa. Facing rapid growth, the biggest challenge for Waukee was maintaining its unique identity within the region, while strengthening its role in regional economic development.

ACTION

Waukee prepared a comprehensive plan that focuses growth in a strategic manner, without losing many key components of their identity and history. The planning process focused on: • Strengthening the historic downtown by expanding the area to incorporate a civic campus and encourage infill development,

- Allowing for annexation to occur in a strategic manner while encouraging infill development,
- Discouraging strip mall development patterns while encouraging commercial villages on both the neighborhood and community scale,
- Developing two regional parks (Copeland Regional Recreation Facility and a regional nature center),
- Encouraging a neighborhood development pattern which incorporates varying residential density and dwelling types,
- Developing multiple business campuses that should attract companies that are the benchmarks within their sector or industry,
- A system of gateways, key intersections and identity corridors which will create a unique character to help Waukee stand out from its neighboring communities.

RESULTS

Downtown and the Waukee Futures Corridors became a focal point of the plan, creating corridors with distinct urban design themes and diverse economic development purposes. These corridors also complement their resurging downtown. Building on the success of the comprehensive plan, the City has recently completed a specific downtown plan leading to new investment, and the Alice's Road Corridor Plan, implementing one of the Futures Corridor with a strategic urban design and economic development plan.

PROJECT: Comprehensive Plan

LOCATION: Waukee, IA

CLIENT REFERENCE:

Brad Deets, Development Services Director
City Of Waukee
515.978.9563
bdeets@waukee.org

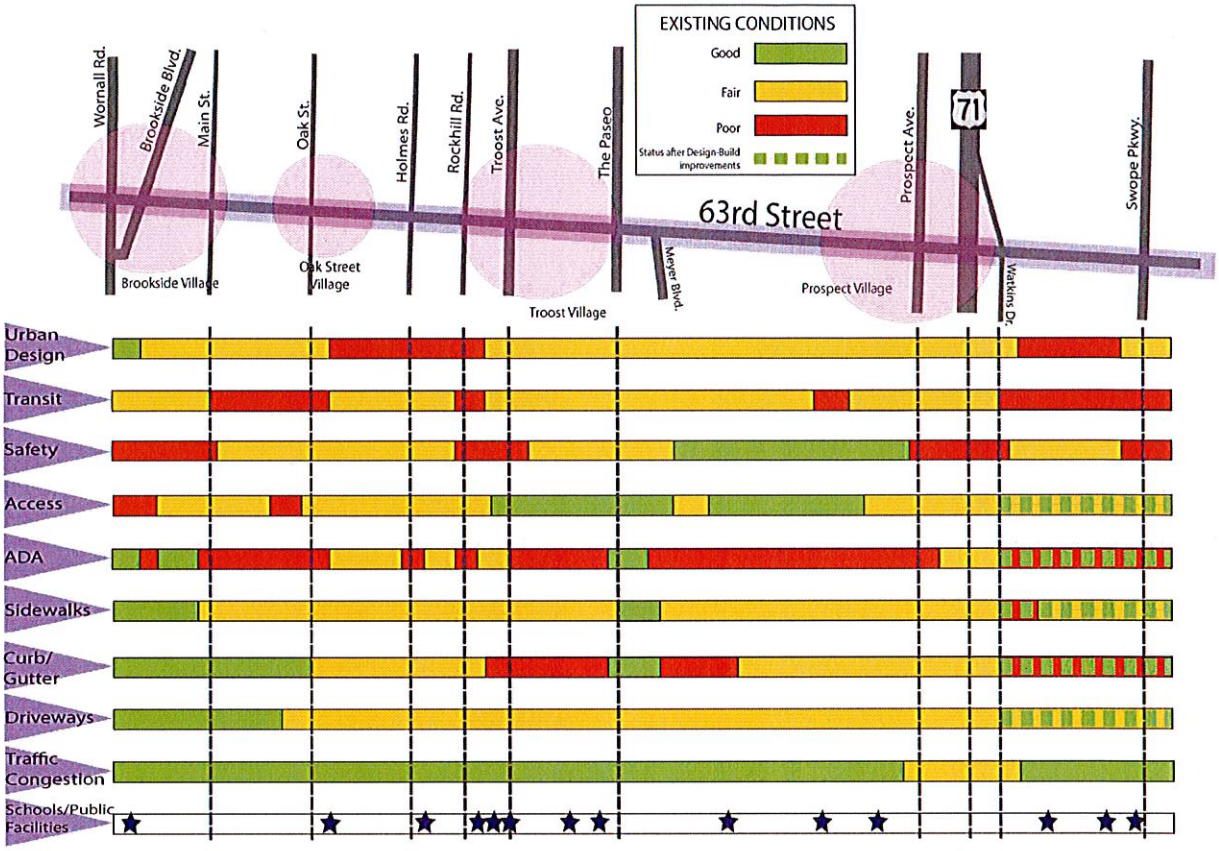

The 63rd Street Corridor represents a diverse community with extensive history and character. Within it, distinctive neighborhood characteristics occur and evolve throughout the corridor. The corridor is anchored to the east by Swope Park, home to many regional attractions, and on the west by Brookside, one of the metro's most vibrant and sustainable commercial areas. From a land use perspective, there are areas that exhibit strong and sustainable presence, while other areas show signs of weakness but have the potential for rejuvenation.

The 63rd Street Capital Improvement Plan identifies future ways in which largely public investment might provide support and even catalyst for cohesiveness to the 63rd Street Corridor, as well as help instigate rejuvenation efforts. The final report of this plan outlines opportunities for sustainability and economic development through varying levels of Public Works investment, and in some cases where other development partners might support those efforts.

This plan includes detailed analysis of the 63rd Street Corridor from Wornall Road on the west to US-71 on the east. In addition, a planning level review for road improvements to the east of US-71 along 63rd Street from Swope Parkway to I-435 is included in order to have a cohesive plan for the future of the 63rd Street Corridor. The section of 63rd Street from US-71 to Jackson Avenue will be reconstructed as part of the City of Kansas City roadway reconstruction design-build program. The purpose of the capital improvement plan is to identify short-term, mid-term and long-term public improvements within the 63rd Street Corridor between Wornall Road and US-71 that will positively impact the economic, physical and social issues of concern to corridor users, residents and businesses.

* Wilson & Company with Gould Evans

PROJECT: 63rd Street Capital Improvement Plan*

LOCATION: Kansas City, MO

CLIENT REFERENCE:
LaDene Morton, Project Manager
Southtown Council
816.809.4310
ladmorton@aol.com

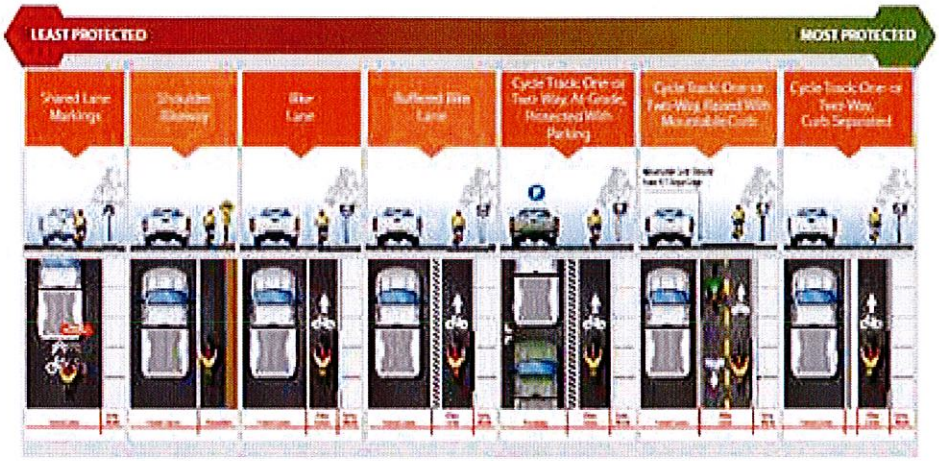

Wilson & Company is currently conducting the first ever Bicycle and Pedestrian Master Plan for Hutchinson, Kansas. The project includes a thorough analysis of roadway inventory to identify candidate streets for bicycle and pedestrian improvements. These identified streets will create a network for improved pedestrian and bicycle mobility throughout the community, connecting people to destinations throughout their community.

Concurrently, Wilson & Company is responsible for conducting a concept plan for multimodal improvements along Main Street from 7th to 30th Avenues. Main Street is a significant corridor extending north out of Downtown Hutchinson. In addition to examining existing built conditions along the roadway, the team is responsible for alternatives development and ultimate design of the roadway with consideration for improved bicycle and pedestrian facilities. The project is timed to be implemented with the 2016 Capital Improvement Program (CIP).

PROJECT: Bicycle and Pedestrian Master Plan and Main Street Concept Design

LOCATION: Hutchinson, KS

CLIENT REFERENCE:
Brian Clennan, PE
Director of Engineering
620.694.1900
brianc@hutchgov.com

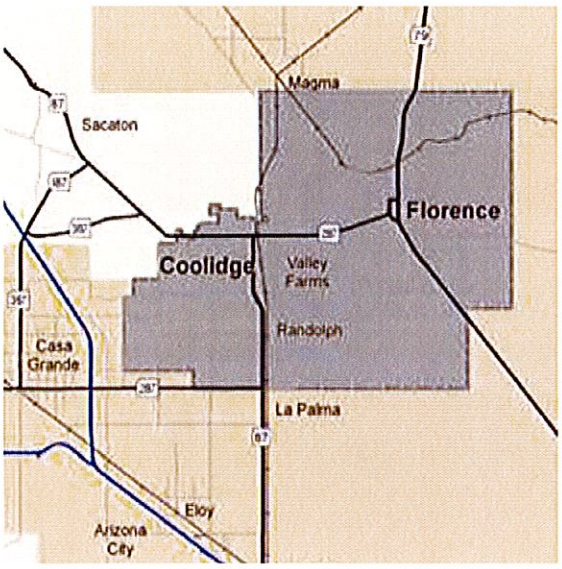

PROJECT: Comprehensive Transporatation Feasibility Plan

LOCATION: Coolidge, AZ

CLIENT REFERENCE:
Susanna Struble, PE, AICP
Public Works Director
520.723.6094
sstruble@coolidgeaz.com

Wilson & Company prepared a Comprehensive Transportation Feasibility Plan for the City of Coolidge in Pinal County, Arizona. This planning effort was conducted by the City under the Arizona Department of Transportation (ADOT) Planning Assistance for Rural Areas (PARA) program. The study is designed to result in definition of multimodal transportation infrastructure to serve motorists, pedestrians, and bicyclists and identification of short-, mid-, and long-range improvement projects. A key focus of this planning effort is an analysis of changes to conditions outlined in the Coolidge Florence Regional Transportation Plan (CFRTP), due to effects of the "Great Recession" and findings and conclusions associated with recently completed planning studies that directly influence the City of Coolidge's transportation system. The feasibility analysis examines roadway alignments that provide regional connections or have economic significance to Coolidge per the Pinal County Regionally Significant Routes (PCRSR) Plan and CAAG Economic Studies in the Randolph Industrial Park area completed by the Central Arizona Governments (CAG). The Plan also will involve development of and recommendations for a bicycle and pedestrian circulation component, based on analysis of safe and feasible routes throughout the City for non motorized traffic. Routes for non-motorized traffic will connect key nodes in the City, such as schools, parks, and commercial centers. Plan development will support updating of the City's Transportation Improvement Plan (TIP) through translation of findings and recommendations into prioritization framework identifying project timing and funding requirements.

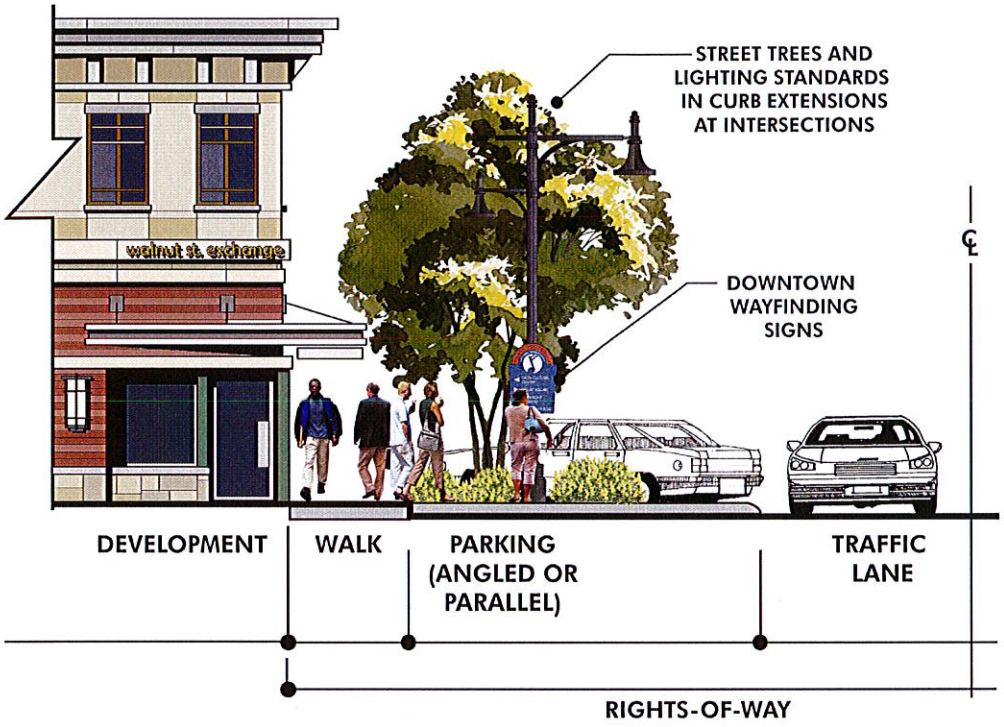

WHAT OUR CLIENTS ARE SAYING

"The approaches you have taken and the innovations are outstanding. There are things in here that I think a lot of people are going to get excited about. I'm amazed at the level of detail that's been paid and the clarity as to the changes that are being proposed. I'm not sure there's ever been a code process that's so transparent. I continue to be very impressed with the project."

Matt Ashby
Planning Services Director, Cheyenne, WY

"You and your company's staff have been great to work with. This plan sets into place many changes for our community that are very positive and will make us a better place to live and work."

Gary Hobbie
Community and Development Services Director, Salina, KS

"I appreciate the quality work that you and your firm has done on this project. It's been a pleasure working with you all."

Dave Barber
Advanced Plans Manager, Metropolitan Planning Department, Wichita, KS

"This is an outstanding plan, and you both were very responsive to our many requests. I thoroughly enjoyed the project."

Scott Knebel
Principal Planner, City of Wichita, KS

"I just wanted you to know how pleased we have been with the process, the approach, and the team efforts that have been expended in order to get to this point. I believe that hiring Gould Evans will prove to be a great decision that will be beneficial to our future."

Charles S. Houser
Mayor, Town of Magnolia Springs, AL

WHAT IF YOUR NEXT PROJECT WAS
SOMETHING UNEXPECTED, REMARKABLE, MEANINGFUL?

WHAT IF?

4041 Mill Street
Kansas City, MO 64111

phone 816.931.6655
fax 816.931.9640

gouldevans.com

KANSAS CITY LAWRENCE PHOENIX SAN FRANCISCO TAMPA NEW ORLEANS

City Administrator
Brad Ratliff

City Clerk
Nick Jacobs

City Engineer
Carl Brooks

Business Office
Trudy Prickett

Chief of Police
Harry Gurin

City Planner
Cliff McDonald

City Attorney
Reid Holbrook

Parks Director
Nathan Musteen

Municipal Offices – 250 S. Main Street, Peculiar, MO 64078
Phone: (816)779-5212 Facsimile: (816)779-1004

To: Mayor & Board of Aldermen
From: Carl Brooks, City Engineer (cbrooks@cityofpeculiar.com)
Date: July 17, 2014
Re: Engineering Services

GENERAL INFORMATION

Applicant: City Staff
Requested Actions: Approval of Carollo Engineers for Engineering Services for Wastewater System Engineering Report and approval of resolution – engineering agreement
Property Location: Northwest area of the City of Peculiar
Purpose: Provide sewer service to the Northwest area of the City of Peculiar as cost effective as possible

PROPOSAL

Address sewer service to this area today and in the future. Projecting flows along with looking at a wastewater system that complies with regulatory limits and requirements.

Engineering agreement is attached.

PREVIOUS ACTIONS

None

KEY ISSUES

The grant is up to a maximum of $50,000.00 for an engineering report. This will be a major planned industrial growth area. Evaluate the partnering with the City of Belton to treat the City of Peculiars wastewater along with planned growth or upgrading. There are other areas, i.e. rates, security, GIS etc. we want to investigate to see if the grant can be used.

Once the Mayor and BOA approve, then agreement can be forwarded to MDNR for their concurrence and approval

STAFF COMMENTS AND SUGGESTIONS

RFQ's were sent out and two engineering firms responded, Carollo Engineers and George Butler and Associates. Staff evaluated both firms' qualifications and feel Carollo Engineers will meet the City's needs.

STAFF RECOMMENDATION

Staff recommends the City move into an engineering agreement and service contract for an engineering report with Carollo Engineers

ATTACHMENTS

Draft of contract
Resolution 2014-xx

DRAFT - Engineer's Scope of Work
City of Peculiar, MO Wastewater System Engineering Report

GENERAL

The following Scope of Work describes the Design Professional's work associated with the study for sewer service extension in a designated northwest area of the City of Peculiar, Missouri (City). This project will comprise the development of an Engineering Report to identify and recommend necessary facilities to extend the City's sewer system and convey the waste flows from this area to the Belton Wastewater Treatment Facility (WWTF) for treatment.

The results of this study will be documented and presented in an Engineering Report, formatted in accordance with the current Clean Water Commission Design Guides 10 CSR 20-8. Design Professional will present a brief assessment of the existing facilities, recommendations for proposed new facilities, estimated costs and impact on user fees for these improvements.

In the event of a conflict or ambiguity between the Agreement and the details of Engineer's Scope of Work set forth in this attachment, Scope of Services shall take precedence.

Scope of Service Work Tasks

The Design Professional's Scope of Work shall consist of the following tasks:

- Task 1.0 – Project Management
- Task 2.0 – Data Collection and Analysis
- Task 3.0 – Engineering Report
- Task 4.0 – Agency Coordination

Task 1.0 – Project Management

1.1 Meetings. Conduct project meetings and workshops. These meetings and workshops are described further as follows:

1.1.1 Kick-Off Meeting.

Conduct initial project kick-off meeting with City and Design Professional to review the project purpose and objectives, scope of work, organization chart, project delivery schedule, and project flow chart. Existing information, including but not limited to previous reports developed for the City's existing wastewater treatment facilities and collection system, existing collection system drawings, master planning documents, GIS data, and other available information, will also be collected.

1.1.2 Coordination Meeting with the City of Belton.

(This meeting could take place in conjunction with the project kick-off meeting.) Conduct project meeting with the Cities of Peculiar and Belton to discuss previous agreements between the two municipalities regarding land and facility use, and operation and maintenance of the proposed new facilities.

1.1.3 MDNR Coordination Meeting.

Conduct project meeting to inform Missouri Department of Natural Resources (MDNR) staff of the evaluation process and work with the City and MDNR staff in developing alternatives for extension of sewer service, and recommendations to convey waste flows to the City of Belton WWTF for treatment. The Design Professional will record the meeting activities, action items, and decisions in meeting notes that will be delivered to the City.

1.2 Progress Meetings. Conduct two progress review meetings to inform City staff on the progress, issues, and recommendations of the study. One meeting will be conducted in person; the other meeting will take place via teleconference.

DRAFT

1.3 Maintain Action Item and Decision Logs. Create and maintain throughout the project an Action Item and Decision Log.

Task 2.0 – Data Collection and Analysis

2.1 Review Existing Documents and Information.

The Design Professional will review existing background information and data related to the study area. This includes a review of such documents as:

- Sewer inventory databases;
- Available topographic maps, floodplain maps;
- Aerial photographs and City Geotechnical Information Systems (GIS) data within the designated service area to evaluate sewer alignments and lift station locations;
- Utility location records, property ownership records, property maps, utility maps; and
- Data for any known proposed projects planned by other departments within the City for identification of potential conflicts.

2.2 Review Previously Developed Reports/Studies.

The City's most recent Comprehensive Plan will also be reviewed to evaluate land use development and wastewater flow projections for the designated service area.

Task 3.0 – Engineering Report

3.1 Prepare an Engineering Report in general conformance with the current Clean Water Commission Design Guides 10 CSR 20-8. The report will include a summary of the following items:

3.1.1 Existing Facilities Description. Based on data/information from previous reports (by Others) provided by the City, Design Professional will present a summary of the existing treatment capacity at both the City of Peculiar's and Belton's wastewater treatment facilities to demonstrate the ability or inability to accept the additional flow from the designated northwest area of Peculiar. Information from these previous reports will also be used to assess the ability to produce effluent that is in compliance with current and anticipated future NPDES Permit Limitations.

DRAFT

3.1.2 Service Area Description. Based upon discussions with City Staff and available GIS Data (to be provided by the City), Design Professional will prepare a figure and summary description of the extension of the sewer service area in northwest Peculiar.

3.1.3 Wastewater Characteristics. Design Professional will evaluate and summarize the proposed characteristics of the wastewater from the proposed service area based on the City's assumptions for industries to be added to the area. Summary of the wastewater characteristics includes average and peak flow capacity, flow contributors, as well as any pre-treatment needs.

3.1.4 Collection System Alignment Analysis. Design Professional will evaluate alignment alternatives for the new interceptor and sanitary sewer system for the northwest service area. City shall provide any available GIS and topographic data of the service area.

3.1.5 Lift Station Location Evaluation. Based on discussions with City Staff and available GIS data, Design Professional will evaluate the constructability, access, design, and cost of up to two (2) possible locations for the new lift station.

3.1.6 Force Main Routing Analysis. Design Professional will evaluate alignment alternatives for the new force main from the new lift station to the Belton WWTF. A hydraulic profile of the facilities will also be developed to depict the design peak flow rate. City shall provide any available GIS and topographic data of the general area of the northwest service area and the Belton WWTF.

3.1.7 Total System Conveyance Alternative. As part of the alternatives evaluation, the Design Professional will evaluate, for comparative purposes, the new facilities and costs required to convey waste flow currently sent to the City's WWTP to the City of Belton's WWTF.

3.1.8 Associated Improvements. Any supplemental improvements required or recommended at the Belton WWTF to accept the additional flow from the northwest Peculiar service area will be evaluated and summarized.

3.1.9 Estimated Project Costs. Design Professional will develop conceptual costs for comparison between developed alternatives. These estimates reflect the Design Professional's professional opinion of costs and will be subject to change as project design develops. The Design

Professional cannot and does not warrant or guarantee the proposals, bids, or actual construction costs will not vary from the conceptual cost estimates that are presented in the Engineering Report.

3.1.10 Project Phasing. Design Professional will evaluate and recommend a phased project plan, as appropriate, for development of the recommended improvements to correspond with projected growth.

3.1.11 Project Financing. City will provide rate model for Engineer's review and use for evaluation of project financing options.

3.1.12 Regulatory and Other Legislative Considerations. Design Professional will evaluate and summarize existing and proposed sewer rate ordinances; inter-municipal agreements and arrangements between the Cities of Peculiar and Belton; as well as any regulatory requirements to be addressed during the design of the new facilities.

3.2 Draft Engineering Report. The Design Professional will provide the City with 2 copies of the draft Engineering Report for the new sewer service extension system.

3.2.1 Finalize Engineering Report. The Design Professional will incorporate City comments into the final Engineering Report.

3.2.2 Hard Copy Report. The Design Professional will deliver 5 copies of the Final Engineering Report.

Task 4.0 - Agency Coordination

Coordination of the findings and recommendations of the Engineering Report with various agencies within the City and State.

The following agencies and/or topics of review will be included in the study. The Design Professional will assist in the arrangement of meetings and discussions to facilitate the required coordination:

4.1 Inter-Municipal Coordination

4.1.1 Land and Facility Use
4.1.2 Operation and Maintenance Responsibilities
4.1.3 User Fees
4.1.4 Sewer Use Ordinances

4.2 MDNR Coordination

4.2.1 Permitting issues

4.2.2 Compliance to existing regulations

4.2.3 Acceptance of proposed wastewater system collection and conveyance system

4.3 Design Professional will identify required permits for the sewer system extension and lift station and force main design.

DRAFT

Project: Engineering Report - Sewer System Extension
City of Peculiar, Missouri
Fee Estimate - Engineering Report

Job Number: 305.75.000

DRAFT

Date: 16-Jul-14
By: M. Turner

Checked:
Date:

Project Task / Description	Estimated Labor Hours: Senior Professional	Lead Project Professional	Senior Technician	Support Staff	Total Number of Hours	Estimated Direct Costs: Travel, Subsistence, and Printing $0.55 per mile	PECE (2) $11.50 per labor hour	Total Costs: Total Labor	Total Direct and Other Costs	Task Costs	Task Total Costs	Comments
Task 1.0 - Project Management											$3,838	
1.1 - Meetings (Kick-Off, Coordination Mtgs (3 total))	3	6			9	$127	$104	$1,541	$231	$1,771		
1.2 - Progress Meetings (2 total)	2	4			6	$44	$69	$1,027	$113	$1,140		
1.3 - Maintain Action Items & Decision Log		6			6		$69	$858	$69	$927		
Task 2.0 - Data Collection and Analysis											$3,428	
2.1 - Review Existing Documents and Information	2	8			10		$115	$1,599	$115	$1,714		
2.2 - Review Previously Developed Reports/Studies	2	8			10		$115	$1,599	$115	$1,714		
Task 3.0 - Engineering Report											$35,363	
3.1 - Prepare Engineering Report												
3.1.1 - Existing Facilities Description		2			2		$23	$286	$23	$309		
3.1.2 - Service Area Description		4			4		$46	$572	$46	$618		
3.1.3 - Wastewater Characteristics		2			2		$23	$286	$23	$309		
3.1.4 - Collection System Alignment Analysis		24	24		48		$552	$6,786	$552	$7,338		
3.1.5 - Lift Station Location Evaluation		16			16		$184	$2,288	$184	$2,472		
3.1.6 - Force Main Routing Analysis		16			16		$184	$2,288	$184	$2,472		
3.1.7 - Total System Conveyance Alternative	8	24			32		$368	$5,252	$368	$5,620		
3.1.8 - Associated Improvements		8			8		$92	$1,144	$92	$1,236		
3.1.9 - Estimated Project Costs		8			8		$92	$1,144	$92	$1,236		
3.1.10 - Project Phasing		8			8		$92	$1,144	$92	$1,236		
3.1.11 - Project Financing	4	12			16		$184	$2,626	$184	$2,810		
3.1.12 - Regulatory & Other Legislative Considerations	4	8			12		$138	$2,054	$138	$2,192		
3.2 - Draft Engineering Report												
3.2.1 - Finalize Engineering Report		24	12	24	60		$690	$6,825	$690	$7,515		
3.2.2 - Final Report Deliverable												
Task 4.0 - Agency Coordination											$7,783	
4.1 - Inter-Municipal Coordination												
4.1.1 - Land & Facility Use	1	4			5		$58	$800	$58	$857		
4.1.2 - Operation and Maintenance Responsibilities	1	2			3		$35	$514	$35	$548		
4.1.3 - User Fees	1	8			9		$104	$1,372	$104	$1,475		
4.1.4 - Sewer Use Ordinances	1	4			5		$58	$800	$58	$857		
4.2 - MDNR Coordination												
4.2.1 - Permitting Issues	1	8			9		$104	$1,372	$104	$1,475		
4.2.2 - Compliance to Existing Regulations	1	4			5		$58	$800	$58	$857		
4.2.3 - Acceptance of Proposed WW Collection & Conveyance System	1	4			5		$58	$800	$58	$857		
4.3 - Identification of Required Permits	1	4			5		$58	$800	$58	$857		
Total Hours	**33**	**226**	**36**	**24**	**319**							
Total Cost	**$7,508**	**$32,318**	**$5,031**	**$1,716**	**$46,573**	**$171**	**$3,669**	**$46,573**	**$3,840**	**$50,412**	**$50,412**	

Notes:
(1) Labor rates based on Carollo fee schedule.
(2) PECE = Project Equipment and Communication Expenses.
(3) Travel costs for meetings with City based on 40 miles round trip from Carollo Engineers offices in Kansas City, MO to Peculiar, Missouri
(4) Travel costs for meetings with Missouri DNR based on 300 miles round trip from Carollo Engineers offices in Kansas City, MO to Jefferson City, Missouri

City Administrator
Brad Ratliff

City Clerk
Nick Jacobs

City Engineer
Carl Brooks

Business Office
Trudy Prickett

Chief of Police
Harry Gurin

City Planner
Cliff McDonald

City Attorney
Reid Holbrook

Parks Director
Nathan Musteen

Municipal Offices – 250 S. Main Street, Peculiar, MO 64078
Phone: (816)779-5212 Facsimile: (816)779-1004

To: Board of Aldermen

From: Trudy Prickett, Business Office Manager

Date: July 21, 2014

Re: Bank Card Fees

GENERAL INFORMATION

Applicant: Board of Aldermen

Requested Actions: Review Bank Card Fees

Date of Application: July 21, 2014

Purpose: Budgeting

Property Location (if applicable):

PROPOSAL

Board of Aldermen to review Bank Card fees charged to the City

PREVIOUS ACTIONS

Was brought as topic for discussion on June 16, 2014 and was directed to figure out fee to counteract the transaction fees that are assessed to the City for Credit/Debit Cards.

STAFF COMMENTS AND SUGGESTIONS

At the direction of the Board of Aldermen staff contacted the Credit Card Processing company who handles our transactions. Staff asked them for assistance in figuring out what the fee should be. Based on the number of current customers being 1947 and the average charge being $145.00 it was determined that a convenience charge be added as a flat rate of $4.50. this fee would be added and handled completely by the Processor and the City would not add any fee. The fee would be added at the time of the transaction and would be collected and processed by the Processing company.

STAFF RECOMMENDATION

Staff recommends implementing the fee for the August Billing.

ATTACHMENTS:

STAFF CONTACT: Trudy Prickett, Business Office Manager
tprickett@cityofpeculiar.org